L79L00 SERIES

NEGATIVE VOLTAGE REGULATORS

- OUTPUT CURRENT UP TO 100 mA
- OUTPUT VOLTAGES OF-5; -6; -8; -9; -12; -15V
- THERMAL OVERLOAD PROTECTION
- SHORT CIRCUIT PROTECTION
- NO EXTERNAL COMPONENTS ARE REQUIRED
- AVAILABLE IN EITHER ± 5% (AC) OR ± 10% (C) SELECTION

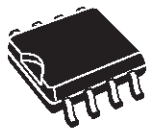

SO-8

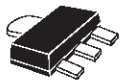

SOT-89

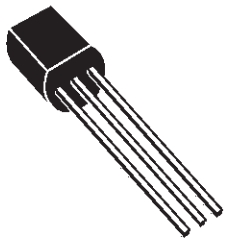

TO-92

DESCRIPTION

The L79L00 series of three-terminal positive regulators employ internal current limiting and thermal shutdown, making them essentially indestructible. If adequate heatsink is provided, they can deliver up to 100 mA output current. They are intended as fixed voltage regulators in a wide range of applications including local or on-card regulation for elimination of noise and distribution problems associated with single-point regulation. In addition, they can be used with power pass elements to make high-current voltage regulators.

The L79L00 series used as Zener diode/resistor combination replacement, offers an effective output impedance improvement of typically two orders of magnetude, along with lower quiescent current and lower noise.

BLOCK DIAGRAM

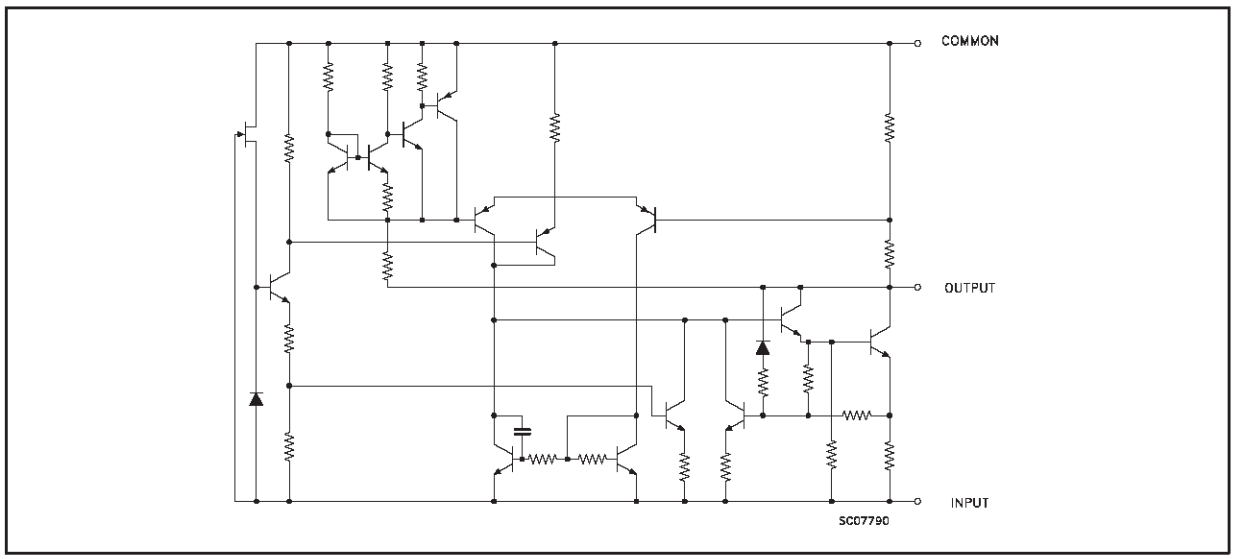

ABSOLUTE MAXIMUM RATING

Symbol	Parameter		Value	Unit
V_i	DC Input Voltage	V_o = -5 V to -9 V	-30	V
		V_o = -12 V to -15 V	-35	V
I_o	Output Current		100	mA
P_{tot}	Power Dissipation		Internally limited (*)	
T_{stg}	Storage Temperature Range		- 40 to 150	^oC
T_{op}	Operating Junction Temperature Range For L79L00C, L79L00AC For L79L00AB		0 to 125 - 40 to 125	^oC ^oC

(*) Our SO-8 package used for Voltage Regulators is modified internally to have pins 2, 3, 6 and 7 electrically commoned to the die attach flag. This particular frame decreases the total thermal resistance of the package and increases its ability to dissipate power when an appropriate area of copper on the printed circuit board is available for heatsinking. The external dimensions are the same as for the standard SO-8

THERMAL DATA

Symbol	Parameter		SO-8	TO-92	SOT-89	Unit
$R_{thj\text{-}case}$	Thermal Resistance Junction-case	Max	20		15	$^oC/W$
$R_{thj\text{-}amb}$	Thermal Resistance Junction-ambient	Max	55 (*)	200		$^oC/W$

(*) Considering 6cm^2 of copper Board heat-sink

TEST CIRCUITS

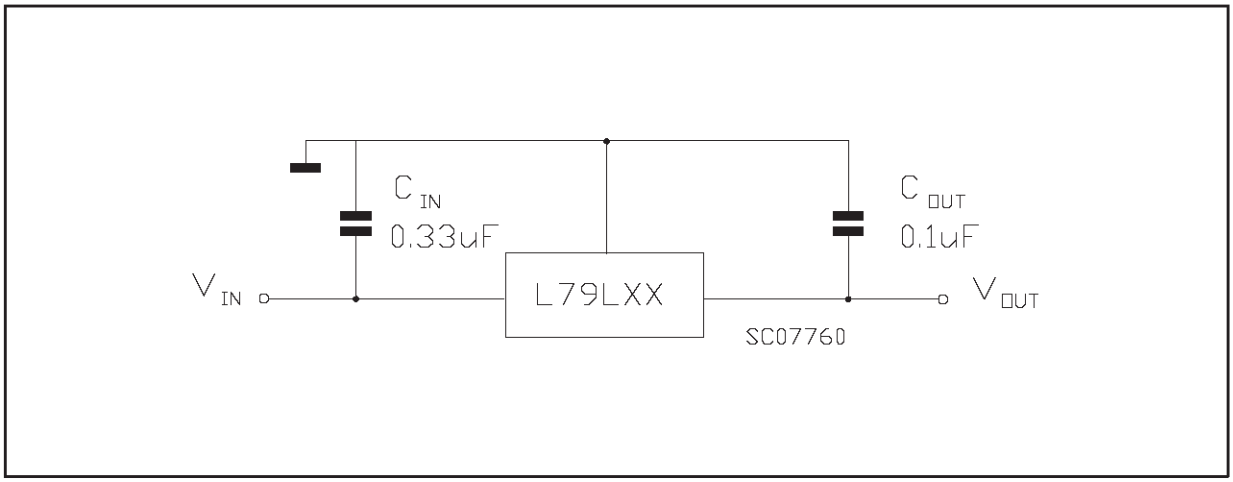

CONNECTION DIAGRAM AND ORDERING NUMBERS (top view)

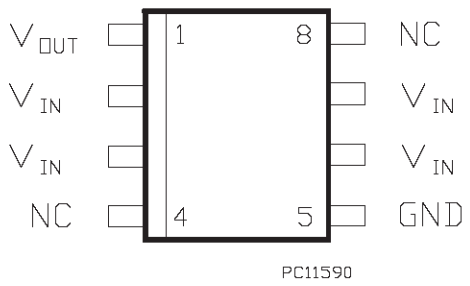

SO-8

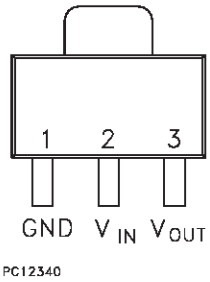

SOT-89

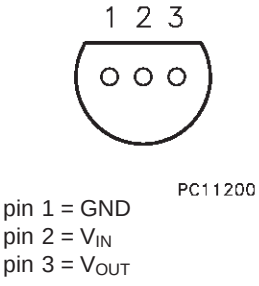

TO-92

BOTTOM VIEW

ORDERING NUMBERS

Type	SO-8	TO-92	SOT-89	Output Voltage
L79L05C	L79L05CD	L79L05CZ		-5 V
L79L05AC	L79L05ACD	L79L05ACZ	L79L05ACU	-5 V
L79L05AB	L79L05ABD	L79L05ABZ	L79L05ABU	-5 V
L79L06C	L79L06CD	L79L06CZ		-6 V
L79L06AC	L79L06ACD	L79L06ACZ	L79L06ACU	-6 V
L79L06AB	L79L06ABD	L79L06ABZ	L79L06ABU	-6 V
L79L08C	L79L08CD	L79L08CZ		-8 V
L79L08AC	L79L08ACD	L79L08ACZ	L79L08ACU	-8 V
L79L08AB	L79L08ABD	L79L08ABZ	L79L08ABU	-8 V
L79L09C	L79L09CD	L79L09CZ		-9 V
L79L09AC	L79L09ACD	L79L09ACZ	L79L09ACU	-9 V
L79L09AB	L79L09ABD	L79L09ABZ	L79L09ABU	-9 V
L79L12C	L79L12CD	L79L12CZ		-12 V
L79L12AC	L79L12ACD	L79L12ACZ	L79L12ACU	-12 V
L79L12AB	L79L12ABD	L79L12ABZ	L79L12ABU	-12 V
L79L15C	L79L15CD	L79L15CZ		-15 V
L79L15AC	L79L15ACD	L79L15ACZ		-15 V
L79L15AB	L79L15ABD	L79L15ABZ		-15 V

ELECTRICAL CHARACTERISTICS FOR L79L05 (refer to the test circuits, T_j = 0 to 125 °C, V_i = -10V, I_o = 40 mA, C_i = 0.33 µF, C_o = 0.1 µF unless otherwise specified)

Symbol	Parameter	Test Conditions	Min.	Typ.	Max.	Unit
V_o	Output Voltage	T_j = 25 °C	-4.6	-5	-5.4	V
V_o	Output Voltage	I_o = 1 to 40 mA V_i = -7 to -20 V I_o = 1 to 70 mA V_i = -10 V	-4.5 -4.5		-5.5 -5.5	V V
ΔV_o	Line Regulation	V_i = -7 to -20 V T_j = 25 °C V_i = -8 to -20 V T_j = 25 °C			200 150	mV mV
ΔV_o	Load Regulation	I_o = 1 to 100 mA T_j = 25 °C I_o = 1 to 40 mA T_j = 25 °C			60 30	mV mV
I_d	Quiescent Current	T_j = 25 °C T_j = 125 °C			6 5.5	mA mA
ΔI_d	Quiescent Current Change	I_o = 1 to 40 mA			0.2	mA
ΔI_d	Quiescent Current Change	V_i = -8 to -20 V			1.5	mA
eN	Output Noise Voltage	B = 10Hz to 100KHz T_j = 25 °C		40		µV
SVR	Supply Voltage Rejection	I_o = 40 mA f = 120 Hz T_j = 25 °C V_i = -8 to -18 V	40	49		dB
V_d	Dropout Voltage			1.7		V

ELECTRICAL CHARACTERISTICS FOR L79L06 (refer to the test circuits, T_j = 0 to 125 °C, V_i = -12V, I_o = 40 mA, C_i = 0.33 µF, C_o = 0.1 µF unless otherwise specified)

Symbol	Parameter	Test Conditions	Min.	Typ.	Max.	Unit
V_o	Output Voltage	T_j = 25 °C	-5.52	-6	-6.48	V
V_o	Output Voltage	I_o = 1 to 40 mA V_i = -8.5 to -20 V I_o = 1 to 70 mA V_i = -12 V	-5.4 -5.4		-6.6 -6.6	V V
ΔV_o	Line Regulation	V_i = -8.5 to -20 V T_j = 25 °C V_i = -9 to -20 V T_j = 25 °C			200 150	mV mV
ΔV_o	Load Regulation	I_o = 1 to 100 mA T_j = 25 °C I_o = 1 to 40 mA T_j = 25 °C			60 30	mV mV
I_d	Quiescent Current	T_j = 25 °C T_j = 125 °C			6 5.5	mA mA
ΔI_d	Quiescent Current Change	I_o = 1 to 40 mA			0.2	mA
ΔI_d	Quiescent Current Change	V_i = -8 to -20 V			1.5	mA
eN	Output Noise Voltage	B = 10Hz to 100KHz T_j = 25 °C		50		µV
SVR	Supply Voltage Rejection	I_o = 40 mA f = 120 Hz T_j = 25 °C V_i = -9 to -20 V	38	46		dB
V_d	Dropout Voltage			1.7		V

ELECTRICAL CHARACTERISTICS FOR L79L08 (refer to the test circuits, T_j = 0 to 125 °C, V_i = -14V, I_o = 40 mA, C_i = 0.33 µF, C_o = 0.1 µF unless otherwise specified)

Symbol	Parameter	Test Conditions	Min.	Typ.	Max.	Unit
V_o	Output Voltage	T_j = 25 °C	-7.36	-8	-8.64	V
V_o	Output Voltage	I_o = 1 to 40 mA V_i = -10.5 to -23 V I_o = 1 to 70 mA V_i = -14 V	-7.2 -7.2		-8.8 -8.8	V V
ΔV_o	Line Regulation	V_i = -10.5 to -23 V T_j = 25 °C V_i = -11 to -23 V T_j = 25 °C			200 150	mV mV
ΔV_o	Load Regulation	I_o = 1 to 100 mA T_j = 25 °C I_o = 1 to 40 mA T_j = 25 °C			80 40	mV mV
I_d	Quiescent Current	T_j = 25 °C T_j = 125 °C			6 5.5	mA mA
ΔI_d	Quiescent Current Change	I_o = 1 to 40 mA			0.2	mA
ΔI_d	Quiescent Current Change	V_i = -11 to -23 V			1.5	mA
eN	Output Noise Voltage	B = 10Hz to 100KHz T_j = 25 °C		60		µV
SVR	Supply Voltage Rejection	I_o = 40 mA f = 120 Hz T_j = 25 °C V_i = -12 to -23 V	36	45		dB
V_d	Dropout Voltage			1.7		V

ELECTRICAL CHARACTERISTICS FOR L79L09 (refer to the test circuits, T_j = 0 to 125 °C, V_i = -15V, I_o = 40 mA, C_i = 0.33 µF, C_o = 0.1 µF unless otherwise specified)

Symbol	Parameter	Test Conditions	Min.	Typ.	Max.	Unit
V_o	Output Voltage	T_j = 25 °C	-8.28	-9	-9.72	V
V_o	Output Voltage	I_o = 1 to 40 mA V_i = -11.5 to -23 V I_o = 1 to 70 mA V_i = -15 V	-8.1 -8.1		-9.9 -9.9	V V
ΔV_o	Line Regulation	V_i = -11.5 to -23 V T_j = 25 °C V_i = -12 to -23 V T_j = 25 °C			250 200	mV mV
ΔV_o	Load Regulation	I_o = 1 to 100 mA T_j = 25 °C I_o = 1 to 40 mA T_j = 25 °C			80 40	mV mV
I_d	Quiescent Current	T_j = 25 °C T_j = 125 °C			6 5.5	mA mA
ΔI_d	Quiescent Current Change	I_o = 1 to 40 mA			0.2	mA
ΔI_d	Quiescent Current Change	V_i = -12 to -23 V			1.5	mA
eN	Output Noise Voltage	B = 10Hz to 100KHz T_j = 25 °C		70		µV
SVR	Supply Voltage Rejection	I_o = 40 mA f = 120 Hz T_j = 25 °C V_i = -12 to -23 V	36	44		dB
V_d	Dropout Voltage			1.7		V

ELECTRICAL CHARACTERISTICS FOR L79L12 (refer to the test circuits, T_j = 0 to 125 °C, V_i = -19V, I_o = 40 mA, C_i = 0.33 µF, C_o = 0.1 µF unless otherwise specified)

Symbol	Parameter	Test Conditions	Min.	Typ.	Max.	Unit
V_o	Output Voltage	T_j = 25 °C	-11.1	-12	-12.9	V
V_o	Output Voltage	I_o = 1 to 40 mA V_i = -14.5 to -27 V I_o = 1 to 70 mA V_i = -19 V	-10.8 -10.8		-13.2 -13.2	V V
ΔV_o	Line Regulation	V_i = -14.5 to -27 V T_j = 25 °C V_i = -16 to -27 V T_j = 25 °C			250 200	mV mV
ΔV_o	Load Regulation	I_o = 1 to 100 mA T_j = 25 °C I_o = 1 to 40 mA T_j = 25 °C			100 50	mV mV
I_d	Quiescent Current	T_j = 25 °C T_j = 125 °C			6.5 6	mA mA
ΔI_d	Quiescent Current Change	I_o = 1 to 40 mA			0.2	mA
ΔI_d	Quiescent Current Change	V_i = -16 to -27 V			1.5	mA
eN	Output Noise Voltage	B = 10Hz to 100KHz T_j = 25 °C		80		µV
SVR	Supply Voltage Rejection	I_o = 40 mA f = 120 Hz T_j = 25 °C V_i = -15 to -25 V	36	42		dB
V_d	Dropout Voltage			1.7		V

ELECTRICAL CHARACTERISTICS FOR L79L15 (refer to the test circuits, T_j = 0 to 125 °C, V_i = -23V, I_o = 40 mA, C_i = 0.33 µF, C_o = 0.1 µF unless otherwise specified)

Symbol	Parameter	Test Conditions	Min.	Typ.	Max.	Unit
V_o	Output Voltage	T_j = 25 °C	-13.8	-15	-16.2	V
V_o	Output Voltage	I_o = 1 to 40 mA V_i = -17.5 to -30 V I_o = 1 to 70 mA V_i = -23 V	-13.5 -13.5		-16.5 -16.5	V V
ΔV_o	Line Regulation	V_i = -17.5 to -30 V T_j = 25 °C V_i = -20 to -30 V T_j = 25 °C			300 250	mV mV
ΔV_o	Load Regulation	I_o = 1 to 100 mA T_j = 25 °C I_o = 1 to 40 mA T_j = 25 °C			150 75	mV mV
I_d	Quiescent Current	T_j = 25 °C T_j = 125 °C			6.5 6	mA mA
ΔI_d	Quiescent Current Change	I_o = 1 to 40 mA			0.2	mA
ΔI_d	Quiescent Current Change	V_i = -20 to -30 V			1.5	mA
eN	Output Noise Voltage	B = 10Hz to 100KHz T_j = 25 °C		90		µV
SVR	Supply Voltage Rejection	I_o = 40 mA f = 120 Hz T_j = 25 °C V_i = -18.5 to -28.5 V	33	39		dB
V_d	Dropout Voltage			1.7		V

ELECTRICAL CHARACTERISTICS FOR L79L05AB AND L79L05AC

(refer to the test circuits, V_i = -10V, I_o = 40 mA, C_i = 0.33 µF, C_o = 0.1 µF,
T_j = 0 to 125 °C for L79L05AC, T_j = -40 to 125 °C for L79L05AB, unless otherwise specified)

Symbol	Parameter	Test Conditions	Min.	Typ.	Max.	Unit
V_o	Output Voltage	T_j = 25 °C	-4.8	-5	-5.2	V
V_o	Output Voltage	I_o = 1 to 40 mA V_i = -7 to -20 V I_o = 1 to 70 mA V_i = -10 V	-4.75 -4.75		-5.25 -5.25	V V
ΔV_o	Line Regulation	V_i = -7 to -20 V T_j = 25 °C V_i = -8 to -20 V T_j = 25 °C			150 100	mV mV
ΔV_o	Load Regulation	I_o = 1 to 100 mA T_j = 25 °C I_o = 1 to 40 mA T_j = 25 °C			60 30	mV mV
I_d	Quiescent Current	T_j = 25 °C T_j = 125 °C			6 5.5	mA mA
ΔI_d	Quiescent Current Change	I_o = 1 to 40 mA			0.1	mA
ΔI_d	Quiescent Current Change	V_i = -8 to -20 V			1.5	mA
eN	Output Noise Voltage	B = 10Hz to 100KHz T_j = 25 °C		40		µV
SVR	Supply Voltage Rejection	I_o = 40 mA f = 120 Hz T_j = 25 °C V_i = -8 to -18 V	41	49		dB
V_d	Dropout Voltage			1.7		V

ELECTRICAL CHARACTERISTICS FOR L79L06AB AND L79L06AC

(refer to the test circuits, V_i = -12V, I_o = 40 mA, C_i = 0.33 µF, C_o = 0.1 µF,
T_j = 0 to 125 °C for L79L06AC, T_j = -40 to 125 °C for L79L06AB, unless otherwise specified)

Symbol	Parameter	Test Conditions	Min.	Typ.	Max.	Unit
V_o	Output Voltage	T_j = 25 °C	-5.76	-6	-6.24	V
V_o	Output Voltage	I_o = 1 to 40 mA V_i = -8.5 to -20 V I_o = 1 to 70 mA V_i = -12 V	-5.7 -5.7		-6.3 -6.3	V V
ΔV_o	Line Regulation	V_i = -8.5 to -20 V T_j = 25 °C V_i = -9 to -20 V T_j = 25 °C			150 100	mV mV
ΔV_o	Load Regulation	I_o = 1 to 100 mA T_j = 25 °C I_o = 1 to 40 mA T_j = 25 °C			60 30	mV mV
I_d	Quiescent Current	T_j = 25 °C T_j = 125 °C			6 5.5	mA mA
ΔI_d	Quiescent Current Change	I_o = 1 to 40 mA			0.1	mA
ΔI_d	Quiescent Current Change	V_i = -9 to -20 V			1.5	mA
eN	Output Noise Voltage	B = 10Hz to 100KHz T_j = 25 °C		50		µV
SVR	Supply Voltage Rejection	I_o = 40 mA f = 120 Hz T_j = 25 °C V_i = -9 to -20 V	39	46		dB
V_d	Dropout Voltage			1.7		V

ELECTRICAL CHARACTERISTICS FOR L79L08AB AND L79L08AC

(refer to the test circuits, V_i = -14V, I_o = 40 mA, C_i = 0.33 µF, C_o = 0.1 µF,
T_j = 0 to 125 °C for L79L08AC, T_j = -40 to 125 °C for L79L08AB, unless otherwise specified)

Symbol	Parameter	Test Conditions	Min.	Typ.	Max.	Unit
V_o	Output Voltage	T_j = 25 °C	-7.68	-8	-8.32	V
V_o	Output Voltage	I_o = 1 to 40 mA V_i = -10.5 to -23 V I_o = 1 to 70 mA V_i = -14 V	-7.6 -7.6		-8.4 -8.4	V V
ΔV_o	Line Regulation	V_i = -10.5 to -23 V T_j = 25 °C V_i = -11 to -23 V T_j = 25 °C			175 125	mV mV
ΔV_o	Load Regulation	I_o = 1 to 100 mA T_j = 25 °C I_o = 1 to 40 mA T_j = 25 °C			80 40	mV mV
I_d	Quiescent Current	T_j = 25 °C T_j = 125 °C			6 5.5	mA mA
ΔI_d	Quiescent Current Change	I_o = 1 to 40 mA			0.1	mA
ΔI_d	Quiescent Current Change	V_i = -11 to -23 V			1.5	mA
eN	Output Noise Voltage	B = 10Hz to 100KHz T_j = 25 °C		60		µV
SVR	Supply Voltage Rejection	I_o = 40 mA f = 120 Hz T_j = 25 °C V_i = -12 to -23 V	37	45		dB
V_d	Dropout Voltage			1.7		V

ELECTRICAL CHARACTERISTICS FOR L79L09AB AND L79L09AC

(refer to the test circuits, V_i = -15V, I_o = 40 mA, C_i = 0.33 µF, C_o = 0.1 µF,
T_j = 0 to 125 °C for L79L09AC, T_j = -40 to 125 °C for L79L09AB, unless otherwise specified)

Symbol	Parameter	Test Conditions	Min.	Typ.	Max.	Unit
V_o	Output Voltage	T_j = 25 °C	-8.64	-9	-9.36	V
V_o	Output Voltage	I_o = 1 to 40 mA V_i = -11.5 to -23 V I_o = 1 to 70 mA V_i = -15 V	-8.55 -8.55		-9.45 -9.45	V V
ΔV_o	Line Regulation	V_i = -11.5 to -23 V T_j = 25 °C V_i = -12 to -23 V T_j = 25 °C			225 150	mV mV
ΔV_o	Load Regulation	I_o = 1 to 100 mA T_j = 25 °C I_o = 1 to 40 mA T_j = 25 °C			80 40	mV mV
I_d	Quiescent Current	T_j = 25 °C T_j = 125 °C			6 5.5	mA mA
ΔI_d	Quiescent Current Change	I_o = 1 to 40 mA			0.1	mA
ΔI_d	Quiescent Current Change	V_i = -12 to -23 V			1.5	mA
eN	Output Noise Voltage	B = 10Hz to 100KHz T_j = 25 °C		70		µV
SVR	Supply Voltage Rejection	I_o = 40 mA f = 120 Hz T_j = 25 °C V_i = -12 to -23 V	37	44		dB
V_d	Dropout Voltage			1.7		V

ELECTRICAL CHARACTERISTICS FOR L79L12AB AND L79L12AC

(refer to the test circuits, V_i = -19V, I_o = 40 mA, C_i = 0.33 µF, C_o = 0.1 µF,
T_j = 0 to 125 °C for L79L12AC, T_j = -40 to 125 °C for L79L12AB, unless otherwise specified)

Symbol	Parameter	Test Conditions	Min.	Typ.	Max.	Unit
V_o	Output Voltage	T_j = 25 °C	-11.5	-12	-12.5	V
V_o	Output Voltage	I_o = 1 to 40 mA V_i = -14.5 to -27 V I_o = 1 to 70 mA V_i = -19 V	-11.4 -11.4		-12.6 -12.6	V V
ΔV_o	Line Regulation	V_i = -14.5 to -27 V T_j = 25 °C V_i = -16 to -27 V T_j = 25 °C			250 200	mV mV
ΔV_o	Load Regulation	I_o = 1 to 100 mA T_j = 25 °C I_o = 1 to 40 mA T_j = 25 °C			100 50	mV mV
I_d	Quiescent Current	T_j = 25 °C T_j = 125 °C			6.5 6	mA mA
ΔI_d	Quiescent Current Change	I_o = 1 to 40 mA			0.1	mA
ΔI_d	Quiescent Current Change	V_i = -16 to -27 V			1.5	mA
eN	Output Noise Voltage	B = 10Hz to 100KHz T_j = 25 °C		80		µV
SVR	Supply Voltage Rejection	I_o = 40 mA f = 120 Hz T_j = 25 °C V_i = -15 to -25 V	37	42		dB
V_d	Dropout Voltage			1.7		V

ELECTRICAL CHARACTERISTICS FOR L79L15AB AND L79L15AC

(refer to the test circuits, V_i = -23V, I_o = 40 mA, C_i = 0.33 µF, C_o = 0.1 µF,
T_j = 0 to 125 °C for L79L15AC, T_j = -40 to 125 °C for L79L15AB, unless otherwise specified)

Symbol	Parameter	Test Conditions	Min.	Typ.	Max.	Unit
V_o	Output Voltage	T_j = 25 °C	-14.4	-15	-15.6	V
V_o	Output Voltage	I_o = 1 to 40 mA V_i = -17.5 to -30 V I_o = 1 to 70 mA V_i = -23 V	-14.25 -14.25		-15.75 -15.75	V V
ΔV_o	Line Regulation	V_i = -17.5 to -30 V T_j = 25 °C V_i = -20 to -30 V T_j = 25 °C			300 250	mV mV
ΔV_o	Load Regulation	I_o = 1 to 100 mA T_j = 25 °C I_o = 1 to 40 mA T_j = 25 °C			150 75	mV mV
I_d	Quiescent Current	T_j = 25 °C T_j = 125 °C			6.5 6	mA mA
ΔI_d	Quiescent Current Change	I_o = 1 to 40 mA			0.1	mA
ΔI_d	Quiescent Current Change	V_i = -20 to -30 V			1.5	mA
eN	Output Noise Voltage	B = 10Hz to 100KHz T_j = 25 °C		90		µV
SVR	Supply Voltage Rejection	I_o = 40 mA f = 120 Hz T_j = 25 °C V_i = -18.5 to -28.5 V	34	39		dB
V_d	Dropout Voltage			1.7		V

SO-8 MECHANICAL DATA

DIM.	mm			inch		
	MIN.	TYP.	MAX.	MIN.	TYP.	MAX.
A			1.75			0.068
a1	0.1		0.25	0.003		0.009
a2			1.65			0.064
a3	0.65		0.85	0.025		0.033
b	0.35		0.48	0.013		0.018
b1	0.19		0.25	0.007		0.010
C	0.25		0.5	0.010		0.019
c1	45 (typ.)					
D	4.8		5.0	0.188		0.196
E	5.8		6.2	0.228		0.244
e		1.27			0.050	
e3		3.81			0.150	
F	3.8		4.0	0.14		0.157
L	0.4		1.27	0.015		0.050
M			0.6			0.023
S	8 (max.)					

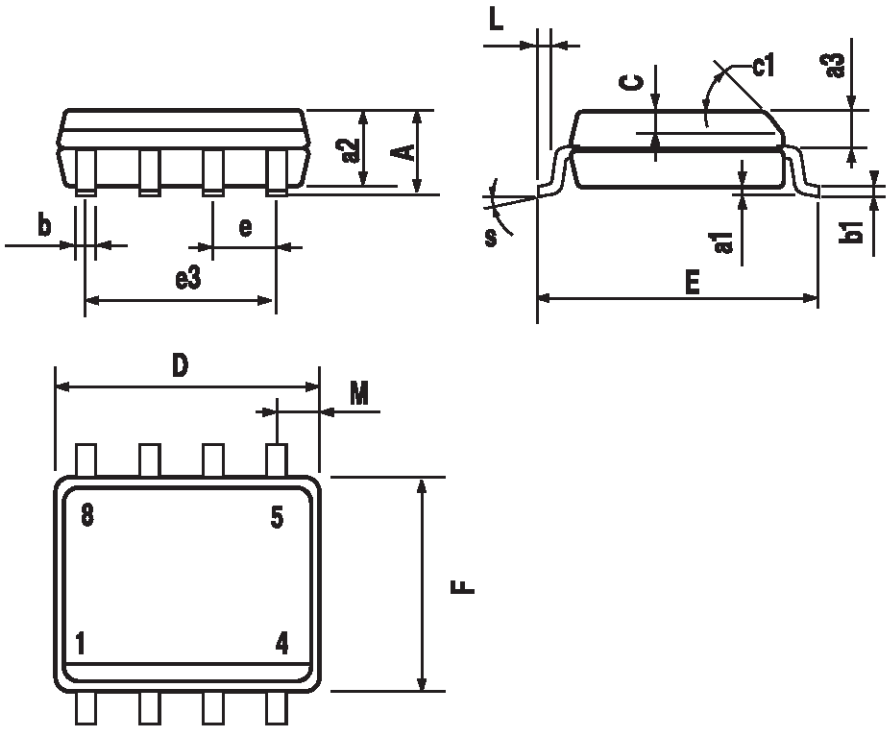

0016023

SOT-89 MECHANICAL DATA

DIM.	mm			mils		
	MIN.	TYP.	MAX.	MIN.	TYP.	MAX.
A	1.4		1.6	55.1		63.0
B	0.44		0.56	17.3		22.0
B1	0.36		0.48	14.2		18.9
C	0.35		0.44	13.8		17.3
C1	0.35		0.44	13.8		17.3
D	4.4		4.6	173.2		181.1
D1	1.62		1.83	63.8		72.0
E	2.29		2.6	90.2		102.4
e	1.42		1.57	55.9		61.8
e1	2.92		3.07	115.0		120.9
H	3.94		4.25	155.1		167.3
L	0.89		1.2	35.0		47.2

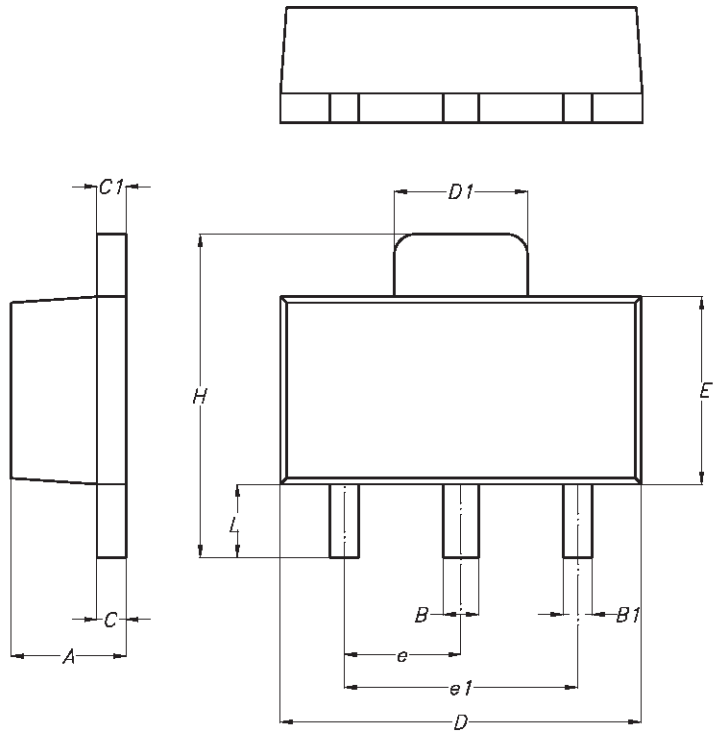

P025H

TO-92 MECHANICAL DATA

DIM.	mm			inch		
	MIN.	TYP.	MAX.	MIN.	TYP.	MAX.
A	4.58		5.33	0.180		0.210
B	4.45		5.2	0.175		0.204
C	3.2		4.2	0.126		0.165
D	12.7			0.500		
E		1.27			0.050	
F	0.4		0.51	0.016		0.020
G	0.35			0.14		

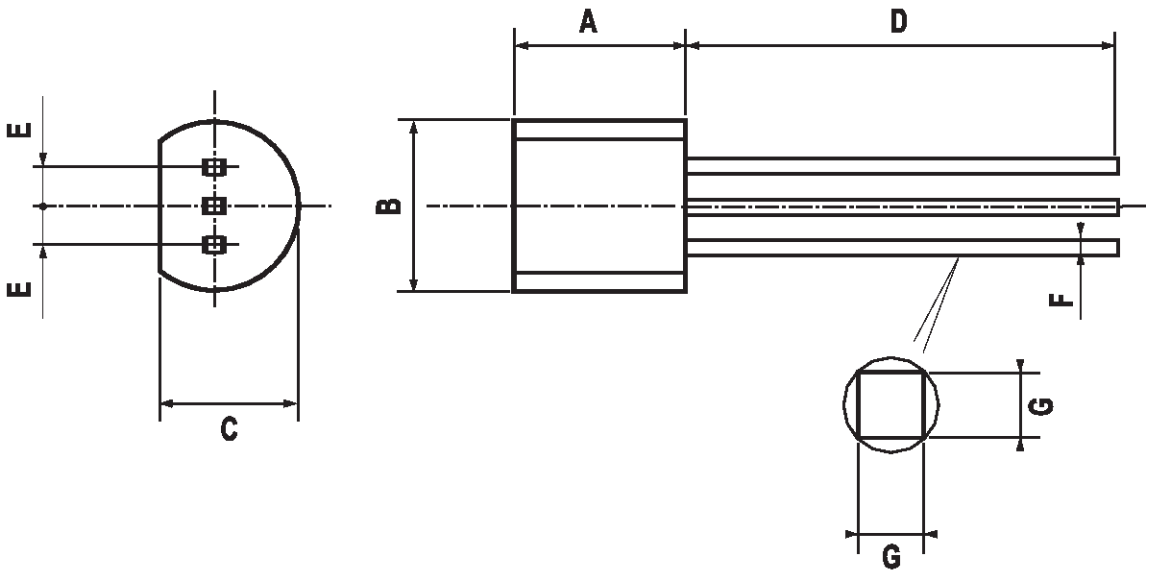

Information furnished is believed to be accurate and reliable. However, STMicroelectronics assumes no responsibility for the consequences of use of such information nor for any infringement of patents or other rights of third parties which may result from its use. No license is granted by implication or otherwise under any patent or patent rights of STMicroelectronics. Specification mentioned in this publication are subject to change without notice. This publication supersedes and replaces all information previously supplied. STMicroelectronics products are not authorized for use as critical components in life support devices or systems without express written approval of STMicroelectronics.

The ST logo is a registered trademark of STMicroelectronics

© 1999 STMicroelectronics – Printed in Italy – All Rights Reserved

STMicroelectronics GROUP OF COMPANIES

Australia - Brazil - China - Finland - France - Germany - Hong Kong - India - Italy - Japan - Malaysia - Malta - Morocco
Singapore - Spain - Sweden - Switzerland - United Kingdom - U.S.A.

http://www.st.com