SM 5817 ... SM 5819

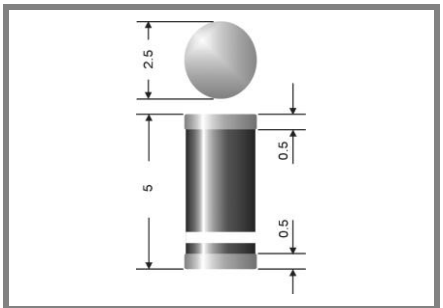

Surface mount diode

Type	Polarity color band	Repetitive peak reverse voltage V_{RRM} V	Surge peak reverse voltage V_{RSM} V	Maximum forward voltage T_j = 25 °C I_F = 3 A V_F 2) V	Maximum reverse recovery time I_F = - A I_R = - A I_{RR} = - A t_{rr} ns
SM 5817	-	20	20	0,75	-
SM 5818	-	30	30	0,875	-
SM 5819	-	40	40	0,9	-

Schottky barrier rectifiers diodes

SM 5817...SM 5819

Forward Current: 1 A

Reverse Voltage: 20 to 40 V

Features

- Max. solder temperature: 260°C
- Plastic material has UL classification 94V-0

Mechanical Data

- Plastic case Melf / DO-213AB
- Weight approx.: 0,12 g
- Terminals: plated terminals solderable per MIL-STD-750
- Mounting position: any
- Standard packaging: 5000 pieces per reel

1) Max. temperature of the terminals T_T = 100 °C
2) I_F = 3 A, Tj = 25 °C
3) T_A = 25 °C
4) Mounted on P.C. board with 25 mm^2 copper pads at each terminal

Absolute Maximum Ratings T_A = 25 °C, unless otherwise specified

Symbol	Conditions	Values	Units
I_{FAV}	Max. averaged fwd. current, R-load, T_T = 100 °C	1	A
I_{FRM}	Repetitive peak forward current f > 15 Hz[1])	10	A
I_{FSM}	Peak fwd. surge current 50 Hz half sinus-wave 3)	30	A
I^2t	Rating for fusing, t < 10 ms 3)	4,5	A²s
R_{thA}	Max. thermal resistance junction to ambient 4)	45	K/W
R_{thT}	Max. thermal resistance junction to terminals	10	K/W
T_j	Operating junction temperature	-50...+150	°C
T_s	Storage temperature	-50...+150	°C

Characteristics T_A = 25 °C, unless otherwise specified

Symbol	Conditions	Values	Units
I_R	Maximum leakage current, T_j = 25 °C; V_R = V_{RRM} T_j = 100 °C; V_R = V_{RRM}	<1 <10	mA mA
C_J	Typical junction capacitance (at MHz and applied reverse voltage of V)	-	pF
Q_{rr}	Reverse recovery charge (U_R = V; I_F = A; dI_F/dt = A/ms)	-	µC
E_{RSM}	Non repetitive peak reverse avalanche energy (I_R = mA; T_j = °C; inductive load switched off)	-	mJ

Dimensions in mm

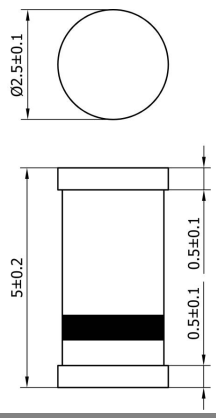

case: Melf / DO-213AB

 © by SEMIKRON

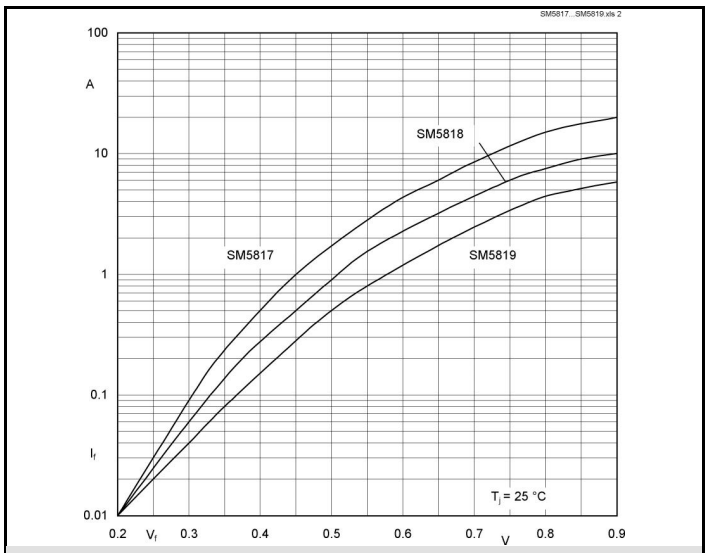

Fig. 1 Forward characteristic (typical values)

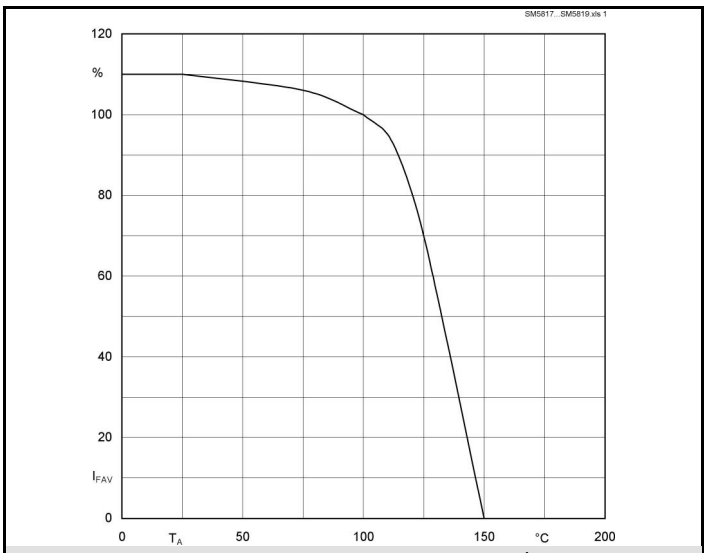

Fig. 2 Rated forward current vs. temp. of the terminals[4])

 © by SEMIKRON