STD10NM60N, STF10NM60N, STP10NM60N, STU10NM60N

N-channel 600 V, 0.53 Ω typ., 10 A MDmesh™ II Power MOSFET in DPAK, TO-220FP, TO-220 and IPAK packages

Datasheet - production data

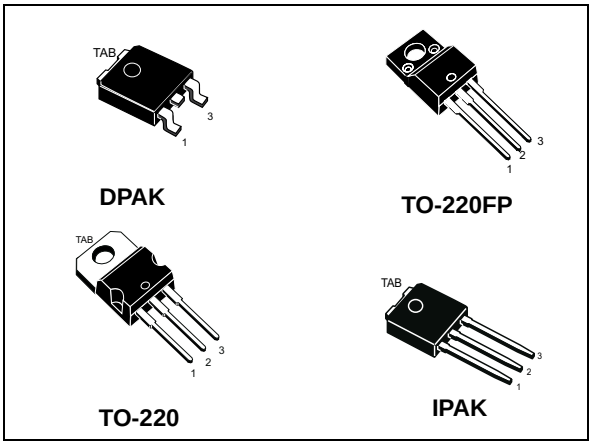

Figure 1. Internal schematic diagram

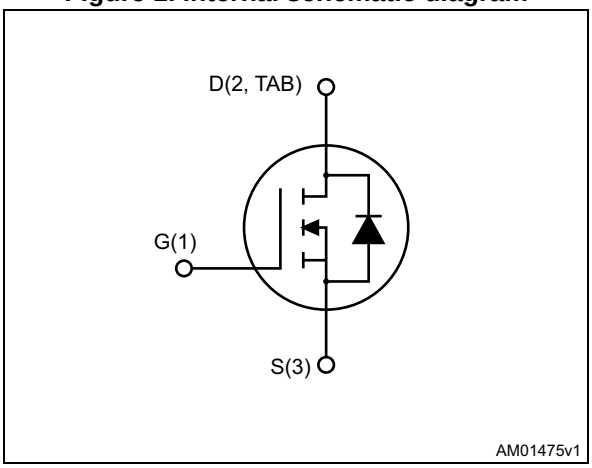

Features

Order code	V_{DS} @T_J max.	$R_{DS(on)}$ max.	I_D	P_{TOT}
STD10NM60N	650 V	0.55 Ω	10 A	70 W
STF10NM60N				25 W
STP10NM60N				70 W
STU10NM60N				

- 100% avalanche tested
- Low input capacitance and gate charge
- Low gate input resistance

Applications

- Switching applications

Description

These devices are N-channel Power MOSFETs developed using the second generation of MDmesh™ technology. This revolutionary Power MOSFET associates a vertical structure to the company's strip layout to yield one of the world's lowest on-resistance and gate charge. It is therefore suitable for the most demanding high efficiency converters.

Table 1. Device summary

Order code	Marking	Package	Packing
STD10NM60N	10NM60N	DPAK	Tape and reel
STF10NM60N	10NM60N	TO-220FP	Tube
STP10NM60N	10NM60N	TO-220	Tube
STU10NM60N	10NM60N	IPAK	Tube

This is information on a product in full production. www.st.com

Contents

1 Electrical ratings 3

2 Electrical characteristics 4

2.1 Electrical characteristics (curves) 6

3 Test circuits 9

4 Package information 10

4.1 STD10NM60N, DPAK (TO-252) package information 10

4.2 STF10NM60N, TO-220FP package information 17

4.3 STP10NM60N, TO-220 package information 19

4.4 STU10NM60N, IPAK (TO-251) 21

5 Packing information 25

6 Revision history 27

1 Electrical ratings

Table 2. Absolute maximum ratings

Symbol	Parameter	Value				Unit
		TO-220	TO-220FP	IPAK	DPAK	
V_{GS}	Gate- source voltage	± 25				V
I_D	Drain current (continuous) at T_C = 25 °C	10	10 (1)	10		A
I_D	Drain current (continuous) at T_C = 100 °C	5	5 (1)	5		A
I_{DM}(2)	Drain current (pulsed)	32	32 (1)	32		A
P_{TOT}	Total dissipation at T_C = 25 °C	70	25	70		W
dv/dt(3)	Peak diode recovery voltage slope	15				V/ns
V_{ISO}	Insulation withstand voltage (RMS) from all three leads to external heat sink (t =1 s; T_C = 25 °C)		2500			V
T_J	Operating junction temperature	- 55 to 150				°C
T_{stg}	Storage temperature					

1. Limited by maximum junction temperature.
2. Pulse width limited by safe operating area.
3. $I_{SD} \leq 10$ A, di/dt ≤ 400 A/µs, V_{DS} peak ≤ $V_{(BR)DSS}$, V_{DD} = 80% $V_{(BR)DSS}$.

Table 3. Thermal data

Symbol	Parameter	Value				Unit
		TO-220	TO-220FP	IPAK	DPAK	
$R_{thj-case}$	Thermal resistance junction-case max.	1.79	5	1.79		°C/W
$R_{thj-amb}$	Thermal resistance junction-ambient max.	62.50		100		°C/W
$R_{thj-pcb}$	Thermal resistance junction-pcb max.				50	°C/W

Table 4. Avalanche characteristics

Symbol	Parameter	Value	Unit
I_{AS}	Avalanche current, repetitive or not-repetitive (pulse width limited by T_j max.)	4	A
E_{AS}	Single pulse avalanche energy (starting T_J = 25 °C, I_D = I_{AS}, V_{DD} = 50 V)	200	mJ

2 Electrical characteristics

(T_{case} = 25 °C unless otherwise specified)

Table 5. On/off-states

Symbol	Parameter	Test conditions	Min.	Typ.	Max.	Unit
$V_{(BR)DSS}$	Drain-source breakdown voltage	I_D = 1 mA, V_{GS} = 0	600			V
		I_D = 1 mA, V_{GS} = 0, T_C = 150 °C		650		
I_{DSS}	Zero-gate voltage drain current (V_{GS} = 0)	V_{DS} = 600 V			1	µA
		V_{DS} = 600 V, T_C = 125 °C			100	
I_{GSS}	Gate-body leakage current (V_{DS} = 0)	V_{GS} = ± 25 V			± 100	nA
$V_{GS(th)}$	Gate threshold voltage	V_{DS} = V_{GS}, I_D = 250 µA	2	3	4	V
$R_{DS(on)}$	Static drain-source on-resistance	V_{GS} = 10 V, I_D = 4 A		0.53	0.55	Ω

Table 6. Dynamic

Symbol	Parameter	Test conditions	Min.	Typ.	Max.	Unit
C_{iss}	Input capacitance	V_{DS} = 50 V, f = 1 MHz, V_{GS} = 0	-	540	-	pF
C_{oss}	Output capacitance		-	44	-	pF
C_{rss}	Reverse transfer capacitance		-	1.2	-	pF
$C_{oss\ eq}$(1)	Equivalent capacitance time related	V_{DS} = 0 to 480 V, V_{GS} = 0	-	110	-	pF
R_g	Gate input resistance	f=1 MHz open drain	-	6	-	Ω
Q_g	Total gate charge	V_{DD} = 480 V, I_D = 8 A, V_{GS} = 10 V (see *Figure 17*)	-	19	-	nC
Q_{gs}	Gate-source charge		-	3	-	nC
Q_{gd}	Gate-drain charge		-	10	-	nC

1. $C_{oss\ eq}$ time related is defined as a constant equivalent capacitance giving the same charging time as C_{oss} when V_{DS} increases from 0 to 80% V_{DSS}.

Table 7. Switching times

Symbol	Parameter	Test conditions	Min.	Typ.	Max.	Unit
$t_{d(on)}$	Turn-on delay time	V_{DD} = 300 V, I_D = 4 A, R_G = 4.7 Ω, V_{GS} = 10 V (see *Figure 16*)	-	10	-	ns
t_r	Rise time		-	12	-	ns
$t_{d(off)}$	Turn-off-delay time		-	32	-	ns
t_f	Fall time		-	15	-	ns

Table 8. Source-drain diode

Symbol	Parameter	Test conditions	Min.	Typ.	Max.	Unit
I_{SD}	Source-drain current		-		8	A
I_{SDM}(1)	Source-drain current (pulsed)				32	
V_{SD}(2)	Forward on voltage	I_{SD} = 8 A, V_{GS} = 0	-		1.3	V
t_{rr}	Reverse recovery time	I_{SD} = 8 A, di/dt = 100 A/µs V_{DD}= 60 V *(see Figure 18)*	-	250		ns
Q_{rr}	Reverse recovery charge		-	2.12		µC
I_{RRM}	Reverse recovery current			17		A
t_{rr}	Reverse recovery time	I_{SD} = 8 A, di/dt = 100 A/µs V_{DD}= 60 V T_J = 150 °C (see *Figure 18*)	-	315		ns
Q_{rr}	Reverse recovery charge			2.6		µC
I_{RRM}	Reverse recovery current			16.5		A

1. Pulse width limited by safe operating area.
2. Pulsed: pulse duration = 300 µs, duty cycle 1.5%.

2.1 Electrical characteristics (curves)

Figure 2. Safe operating area for TO-220

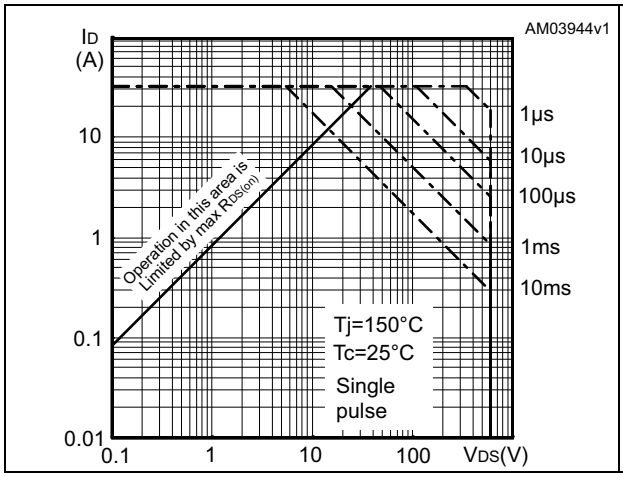

Figure 3. Thermal impedance for TO-220

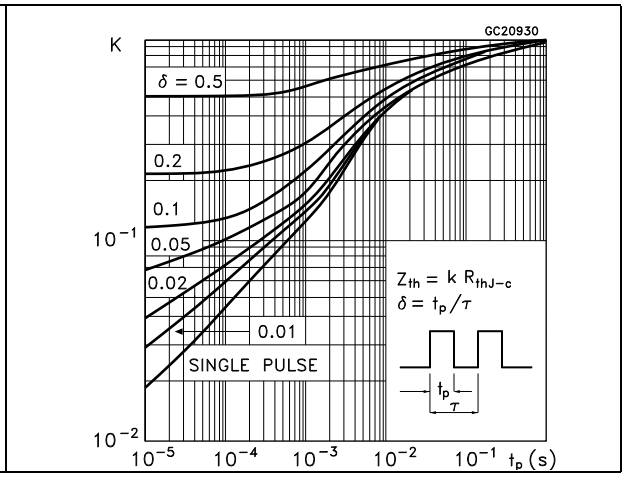

Figure 4. Safe operating area for TO-220FP

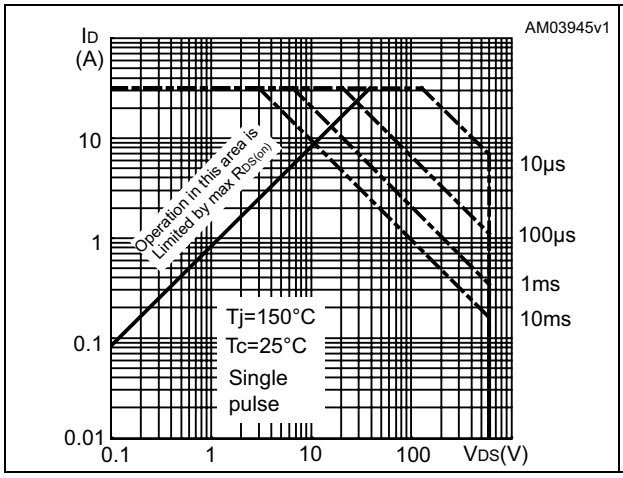

Figure 5. Thermal impedance for TO-220FP

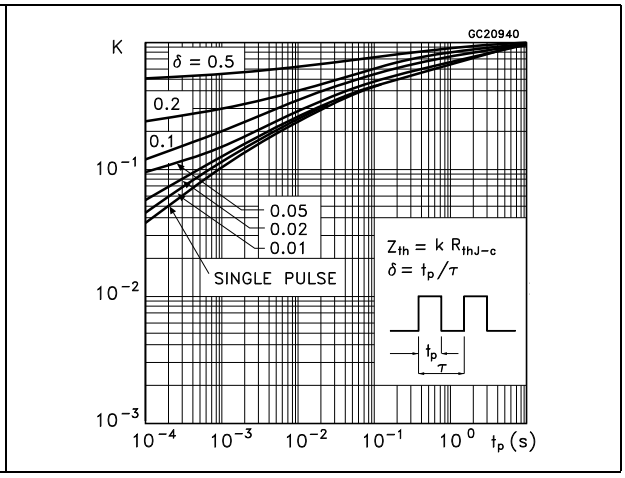

Figure 6. Safe operating area for DPAK, IPAK

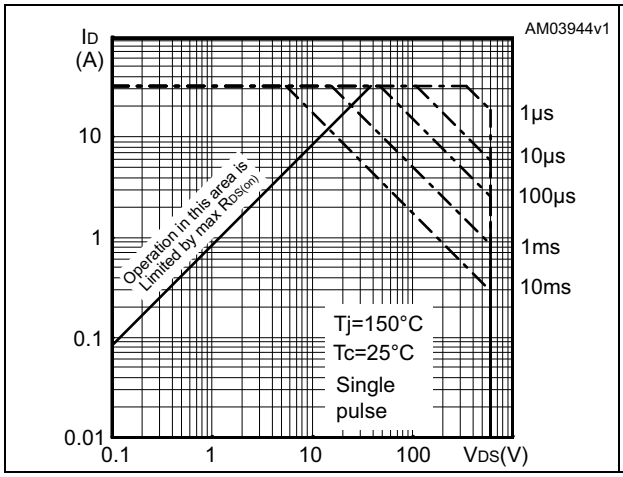

Figure 7. Thermal impedance for DPAK, IPAK

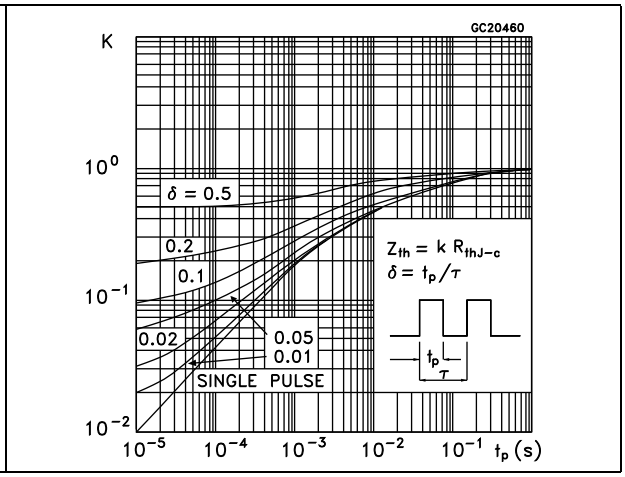

Figure 8. Output characteristics

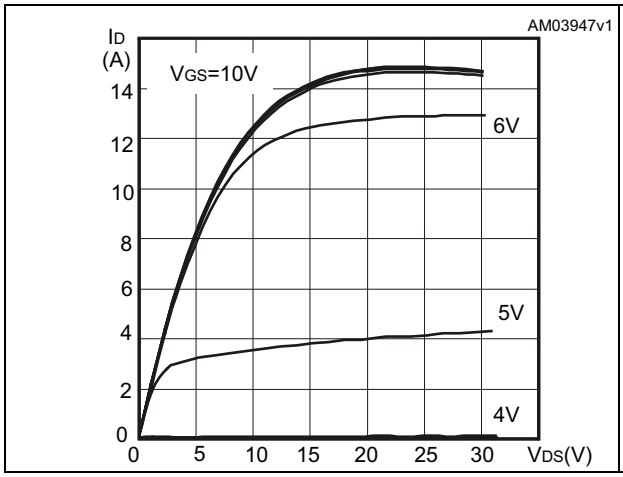

Figure 9. Transfer characteristics

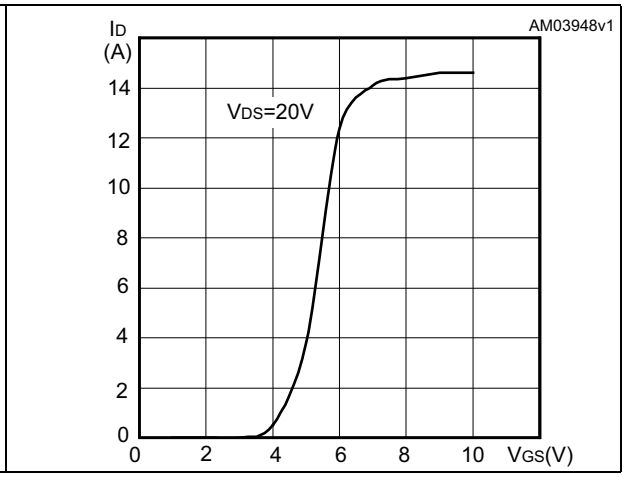

Figure 10. Normalized V_{DS} vs. temperature

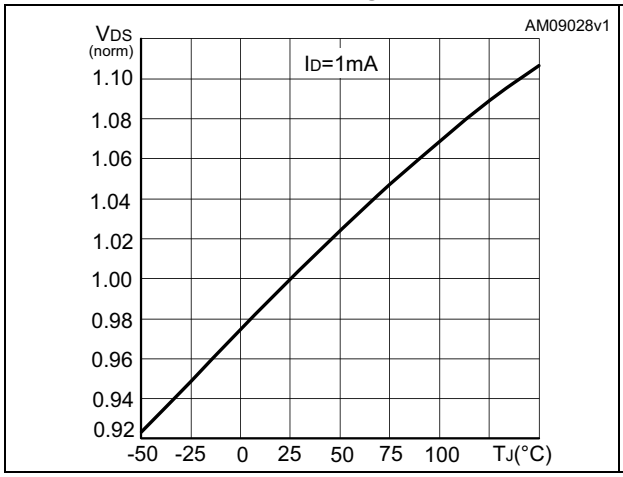

Figure 11. Static drain-source on-resistance

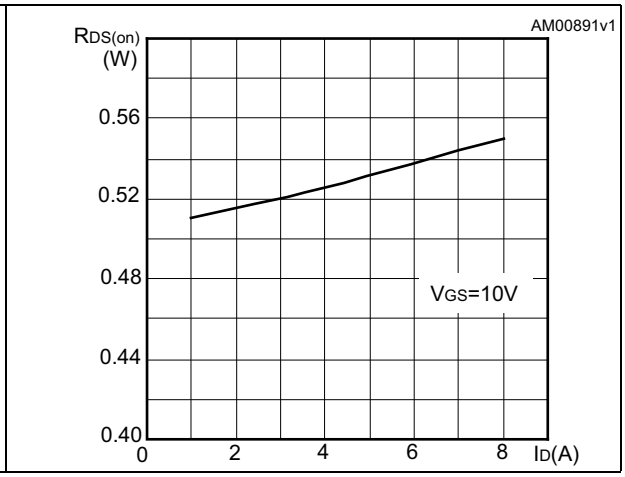

Figure 12. Gate charge vs. gate-source voltage

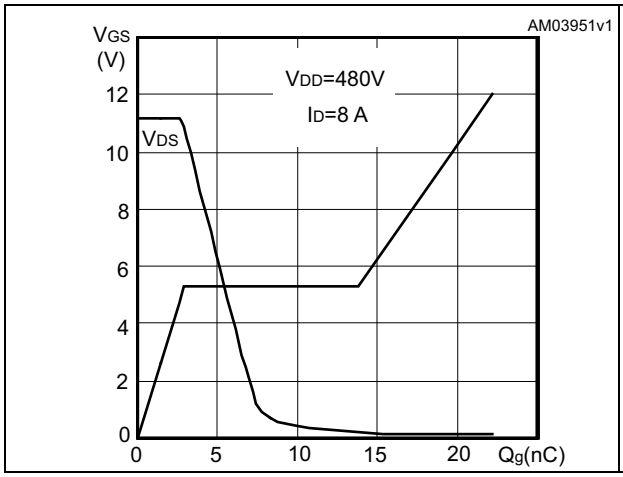

Figure 13. Capacitance variations

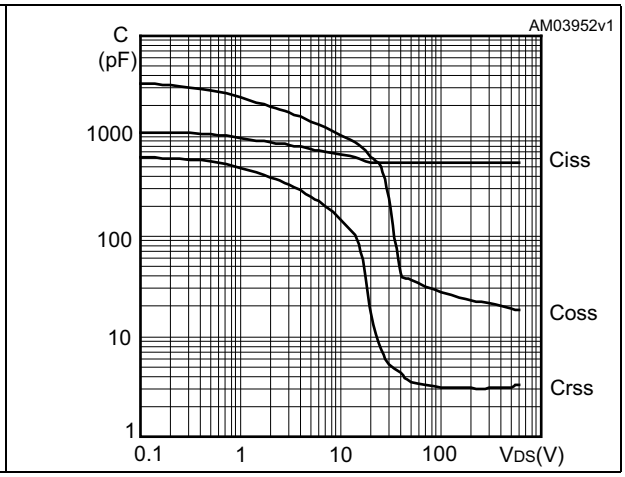

Figure 14. Normalized gate threshold voltage vs. temperature

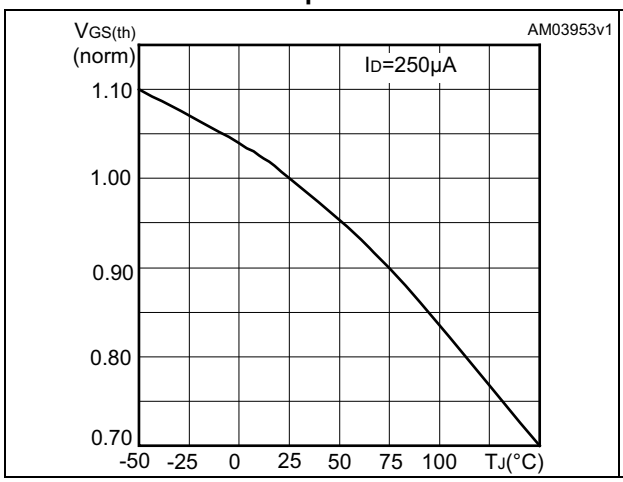

Figure 15. Normalized on-resistance vs. temperature

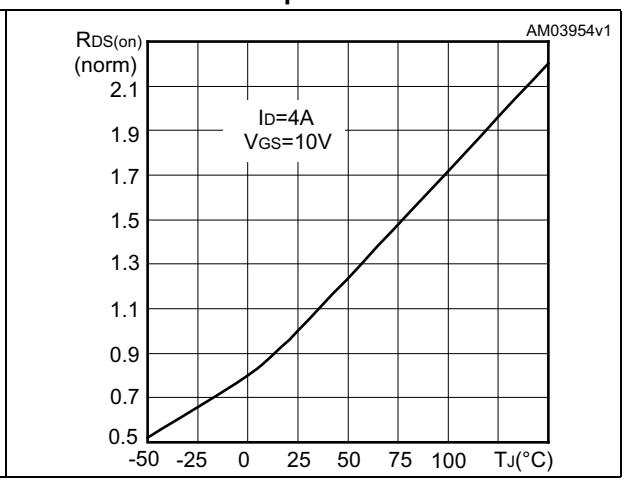

3 Test circuits

Figure 16. Switching times test circuit for resistive load

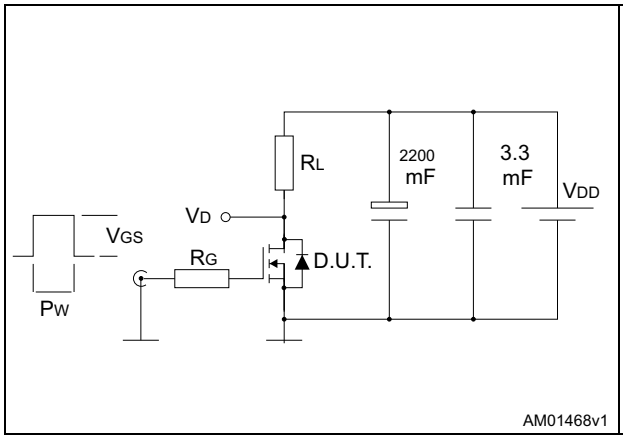

Figure 17. Gate charge test circuit

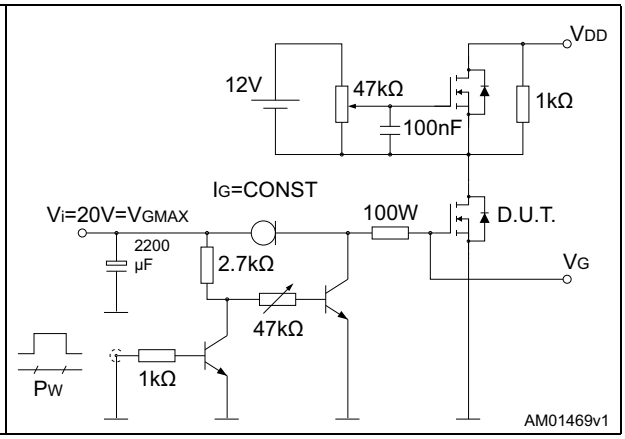

Figure 18. Test circuit for inductive load switching and diode recovery times

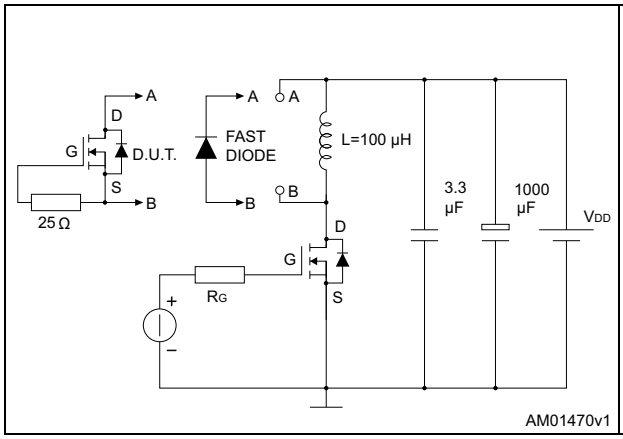

Figure 19. Unclamped inductive load test circuit

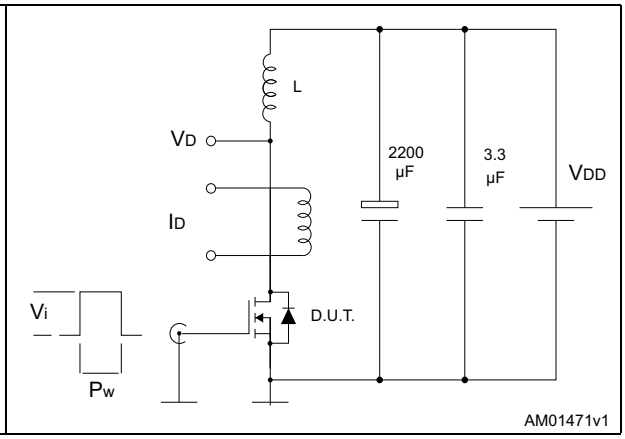

Figure 20. Unclamped inductive waveform

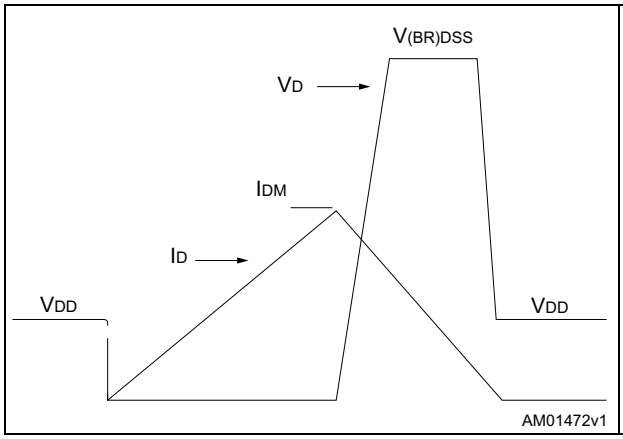

Figure 21. Switching time waveform

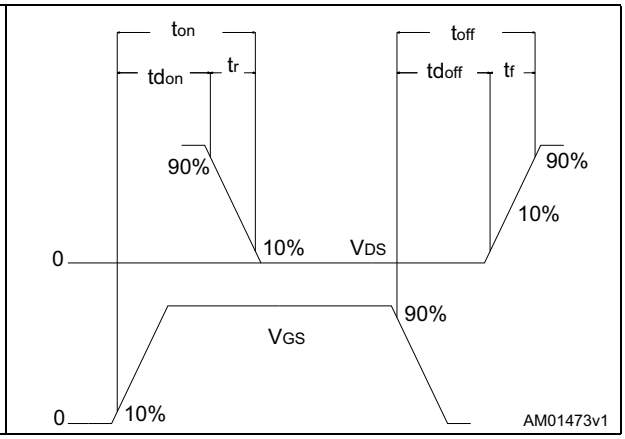

4 Package information

In order to meet environmental requirements, ST offers these devices in different grades of ECOPACK® packages, depending on their level of environmental compliance. ECOPACK® specifications, grade definitions and product status are available at: *www.st.com*. ECOPACK is an ST trademark.

4.1 STD10NM60N, DPAK (TO-252) package information

Figure 22. DPAK (TO-252) type A package outline

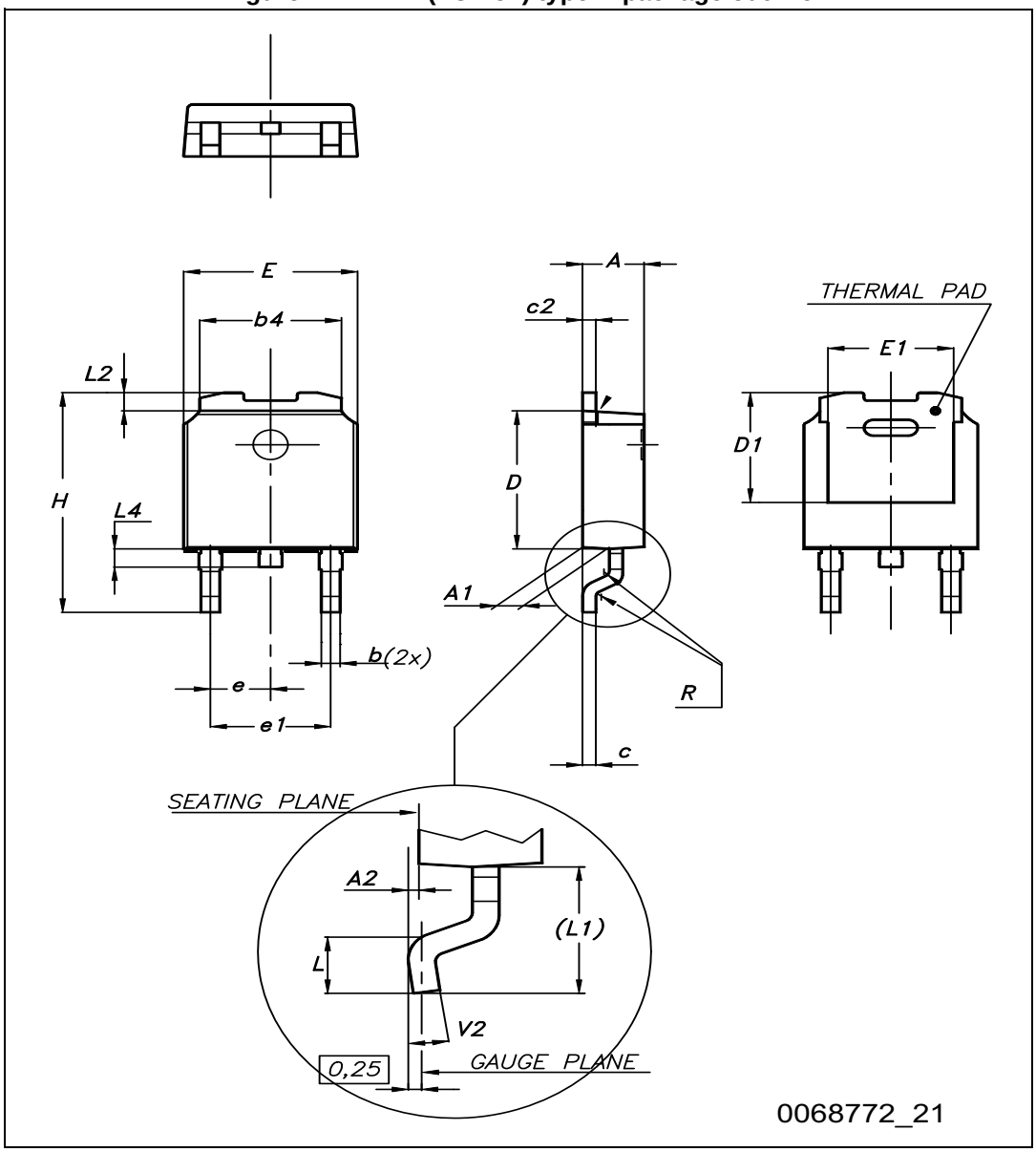

Table 9. DPAK (TO-252) type A mechanical data

Dim.	mm		
	Min.	Typ.	Max.
A	2.20		2.40
A1	0.90		1.10
A2	0.03		0.23
b	0.64		0.90
b4	5.20		5.40
c	0.45		0.60
c2	0.48		0.60
D	6.00		6.20
D1	4.95	5.10	5.25
E	6.40		6.60
E1	4.60	4.70	4.80
e	2.16	2.28	2.40
e1	4.40		4.60
H	9.35		10.10
L	1.00		1.50
(L1)	2.60	2.80	3.00
L2	0.65	0.80	0.95
L4	0.60		1.00
R		0.20	
V2	0°		8°

Figure 23. DPAK (TO-252) type C2 outline

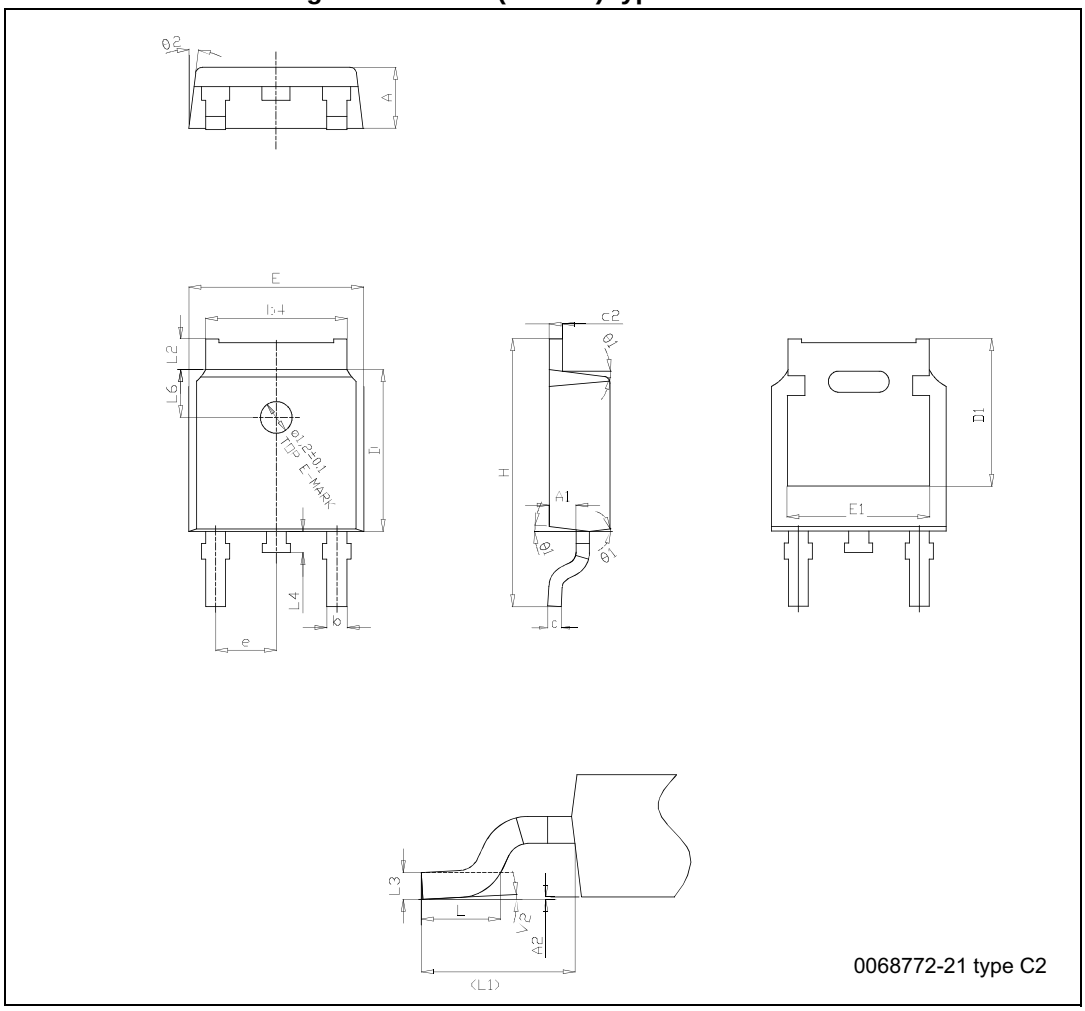

Table 10. DPAK (TO-252) type C2 package mechanical data

Dim.	mm		
	Min.	Typ.	Max.
A	2.20	2.30	2.38
A1	0.90	1.01	1.10
A2	0.00		0.10
b	0.72		0.85
b4	5.13	5.33	5.46
c	0.47		0.60
c2	0.47		0.60
D	6.00	6.10	6.20
D1	5.10		5.60
E	6.50	6.60	6.70
E1	5.20		5.50
e	2.186	2.286	2.386
H	9.80	10.10	10.40
L	1.40	1.50	1.70
(L1)	2.90 REF		
L2	0.90		1.25
L3	0.51 BSC		
L4	0.60	0.80	1.00
L6	1.80 BSC		
Θ1	5°	7°	9°
Θ2	5°	7°	9°
V2	0°		8°

Figure 24. DPAK (TO-252) type E package outline

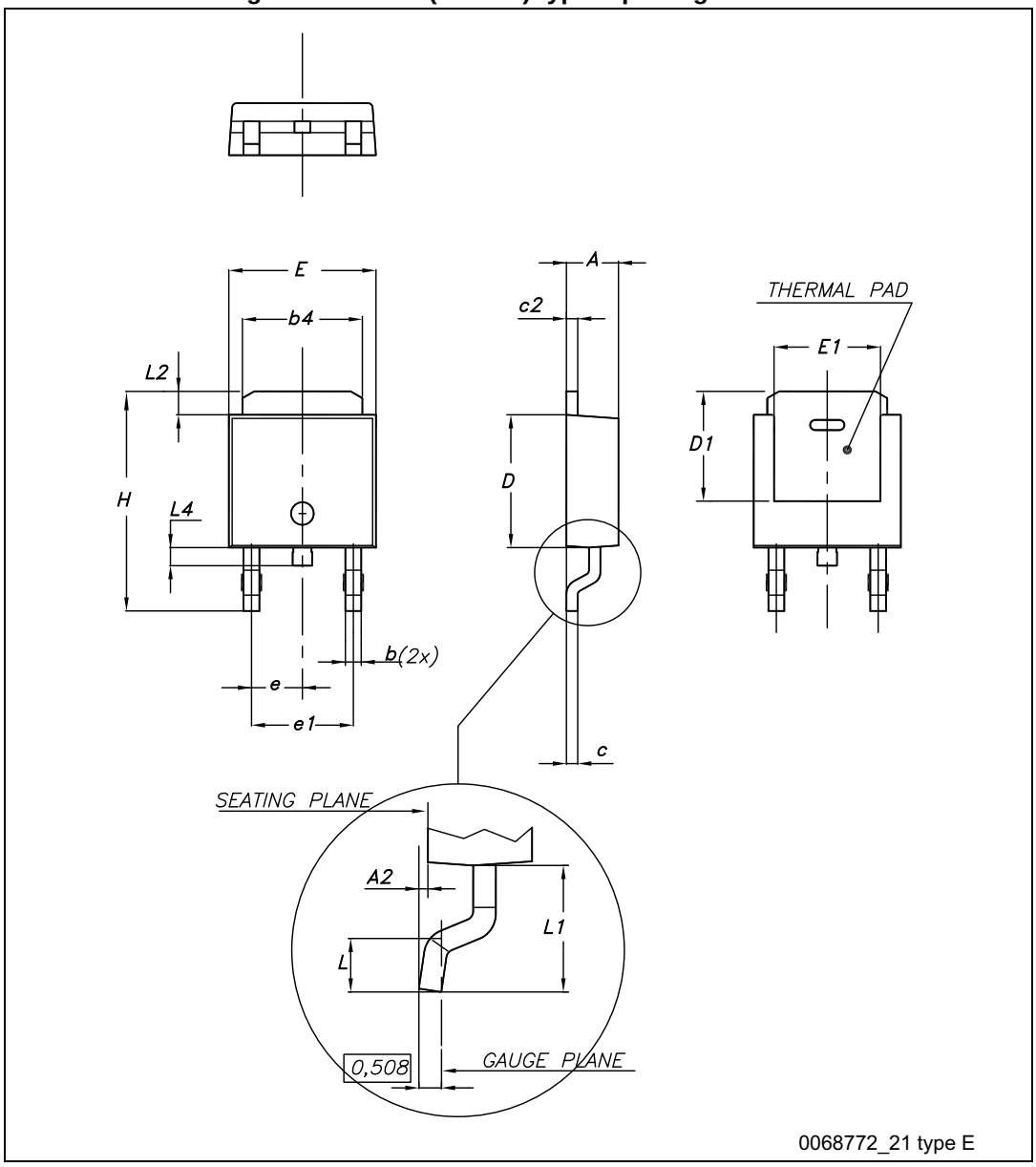

Table 11. DPAK (TO-252) type E mechanical data

Dim.	mm		
	Min.	Typ.	Max.
A	2.18		2.39
A2			0.13
b	0.65		0.884
b4	4.95		5.46
c	0.46		0.61
c2	0.46		0.60
D	5.97		6.22
D1	5.21		
E	6.35		6.73
E1	4.32		
e		2.286	
e1		4.572	
H	9.94		10.34
L	1.50		1.78
L1		2.74	
L2	0.89		1.27
L4			1.02

Figure 25. DPAK (TO-252) type A, C2, E recommended footprint [a]

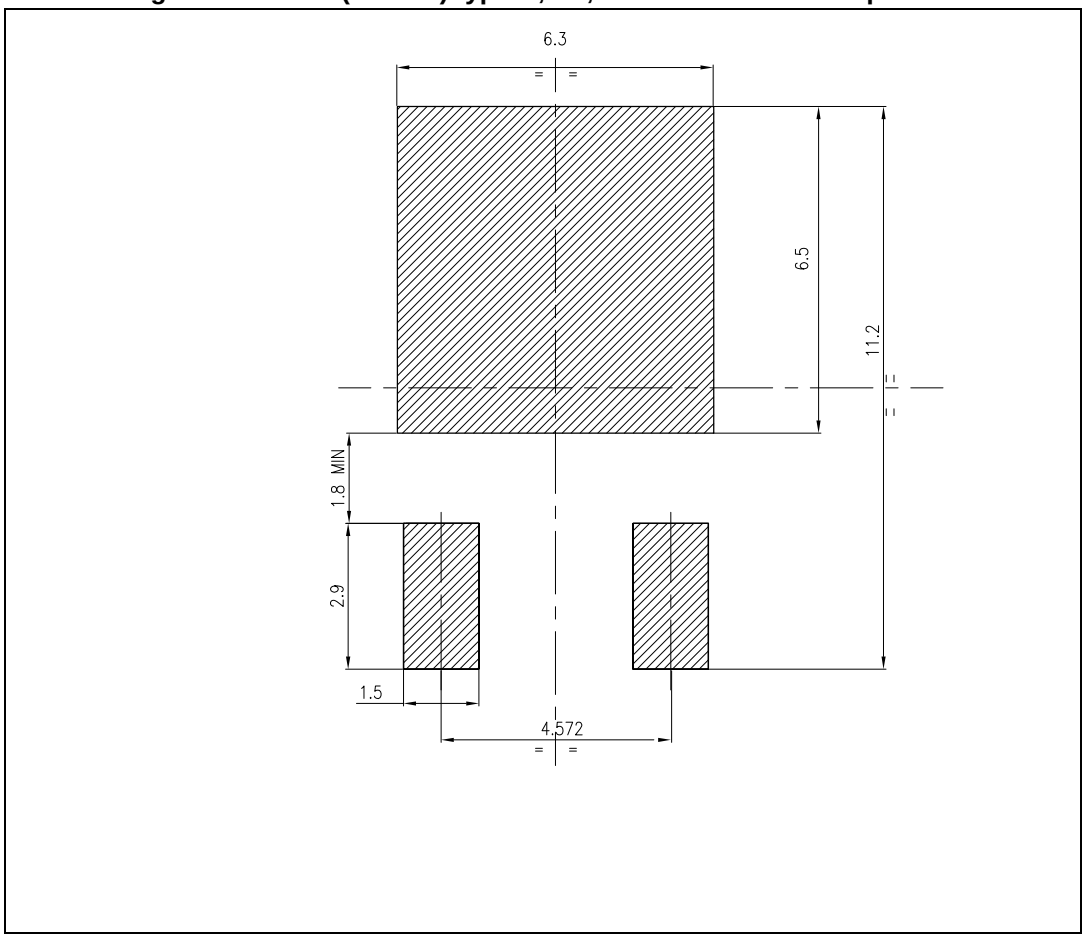

a. All dimensions are in millimeters

4.2 STF10NM60N, TO-220FP package information

Figure 26. TO-220FP package outline

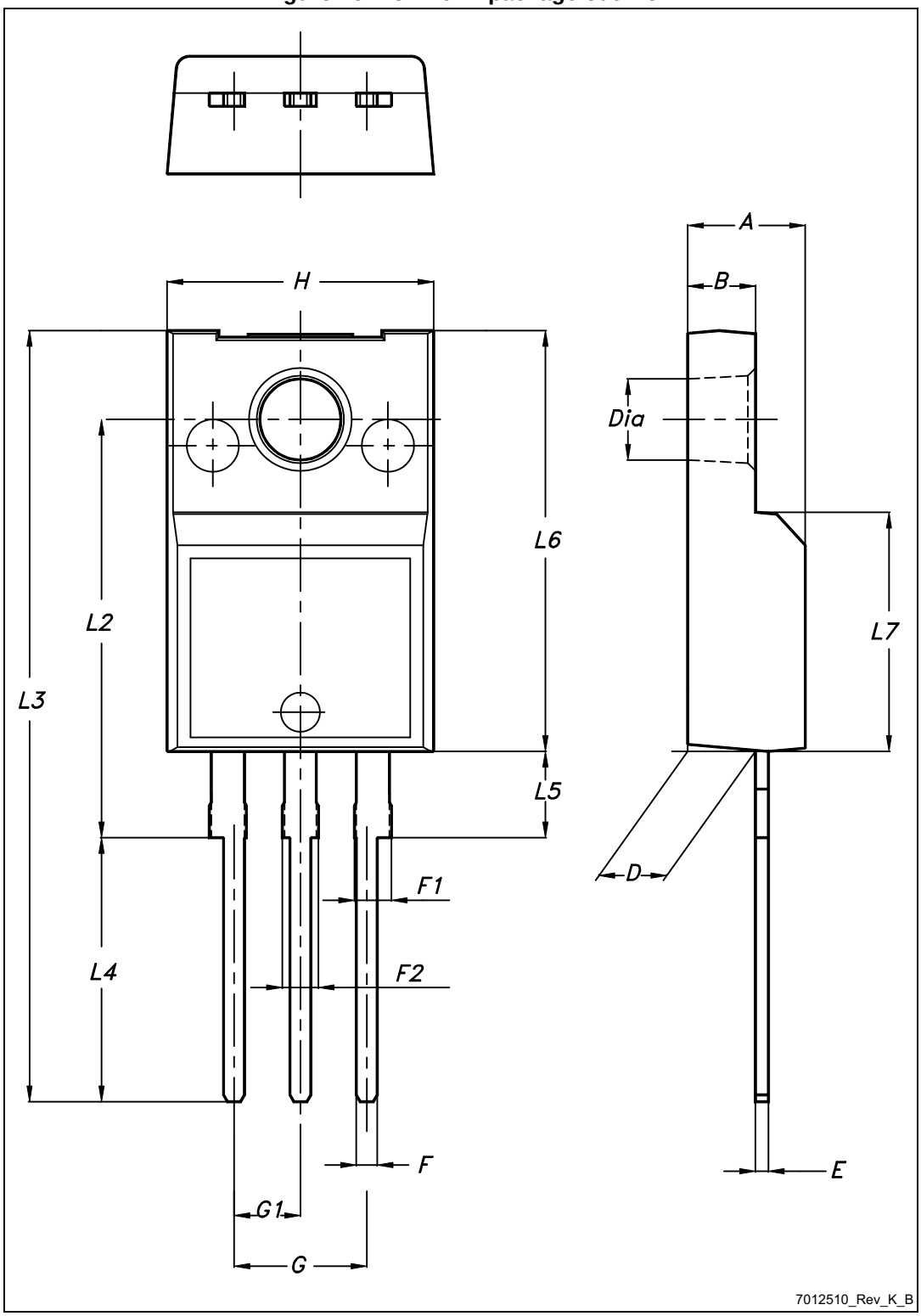

Table 12. TO-220FP package mechanical data

Dim.	mm		
	Min.	Typ.	Max.
A	4.4		4.6
B	2.5		2.7
D	2.5		2.75
E	0.45		0.7
F	0.75		1
F1	1.15		1.70
F2	1.15		1.70
G	4.95		5.2
G1	2.4		2.7
H	10		10.4
L2		16	
L3	28.6		30.6
L4	9.8		10.6
L5	2.9		3.6
L6	15.9		16.4
L7	9		9.3
Dia	3		3.2

4.3 STP10NM60N, TO-220 package information

Figure 27. TO-220 type A package outline

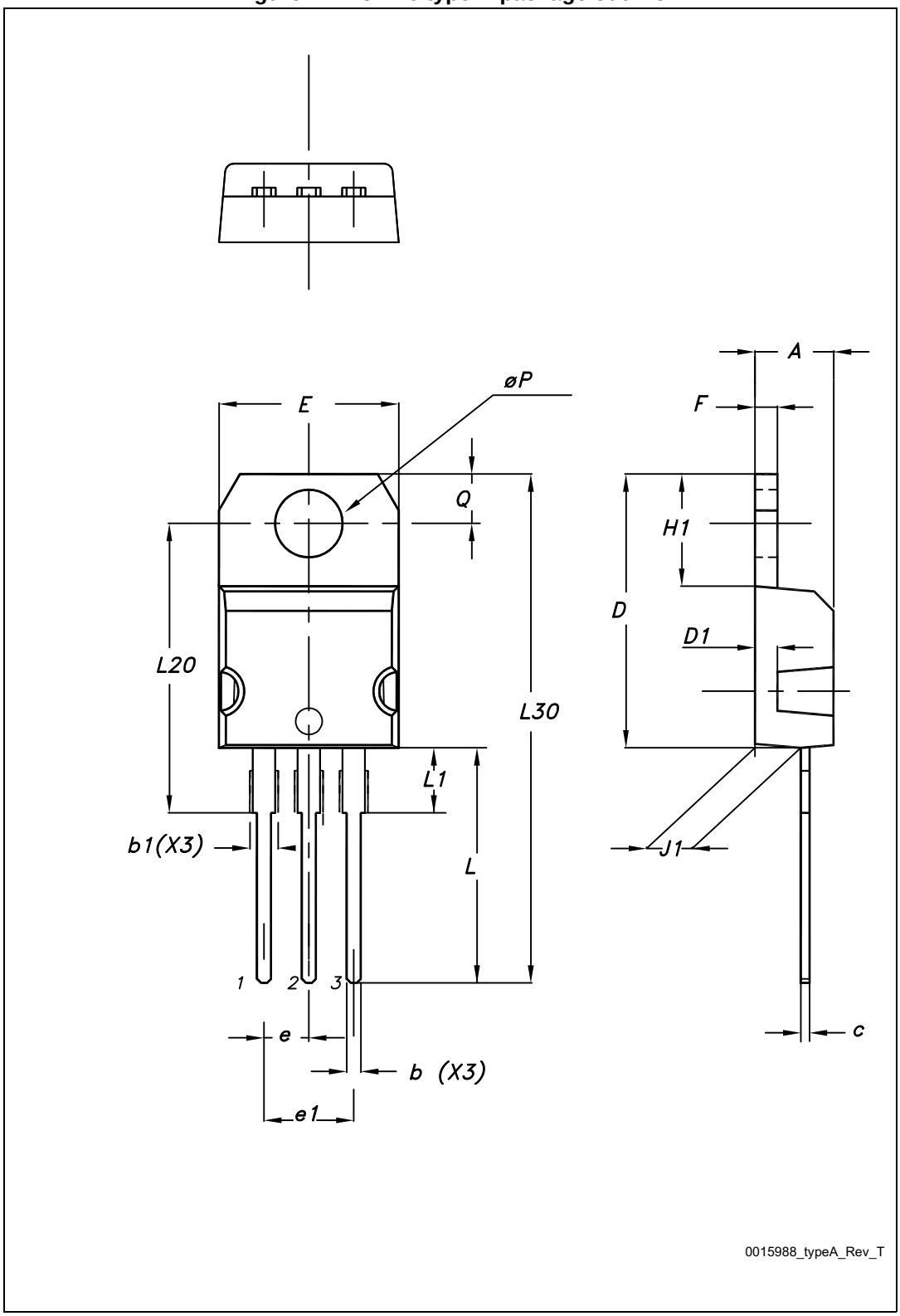

Table 13. TO-220 type A mechanical data

Dim.	mm		
	Min.	Typ.	Max.
A	4.40		4.60
b	0.61		0.88
b1	1.14		1.70
c	0.48		0.70
D	15.25		15.75
D1		1.27	
E	10		10.40
e	2.40		2.70
e1	4.95		5.15
F	1.23		1.32
H1	6.20		6.60
J1	2.40		2.72
L	13		14
L1	3.50		3.93
L20		16.40	
L30		28.90	
øP	3.75		3.85
Q	2.65		2.95

4.4 STU10NM60N, IPAK (TO-251)

Figure 28. IPAK (TO-251) type A outline

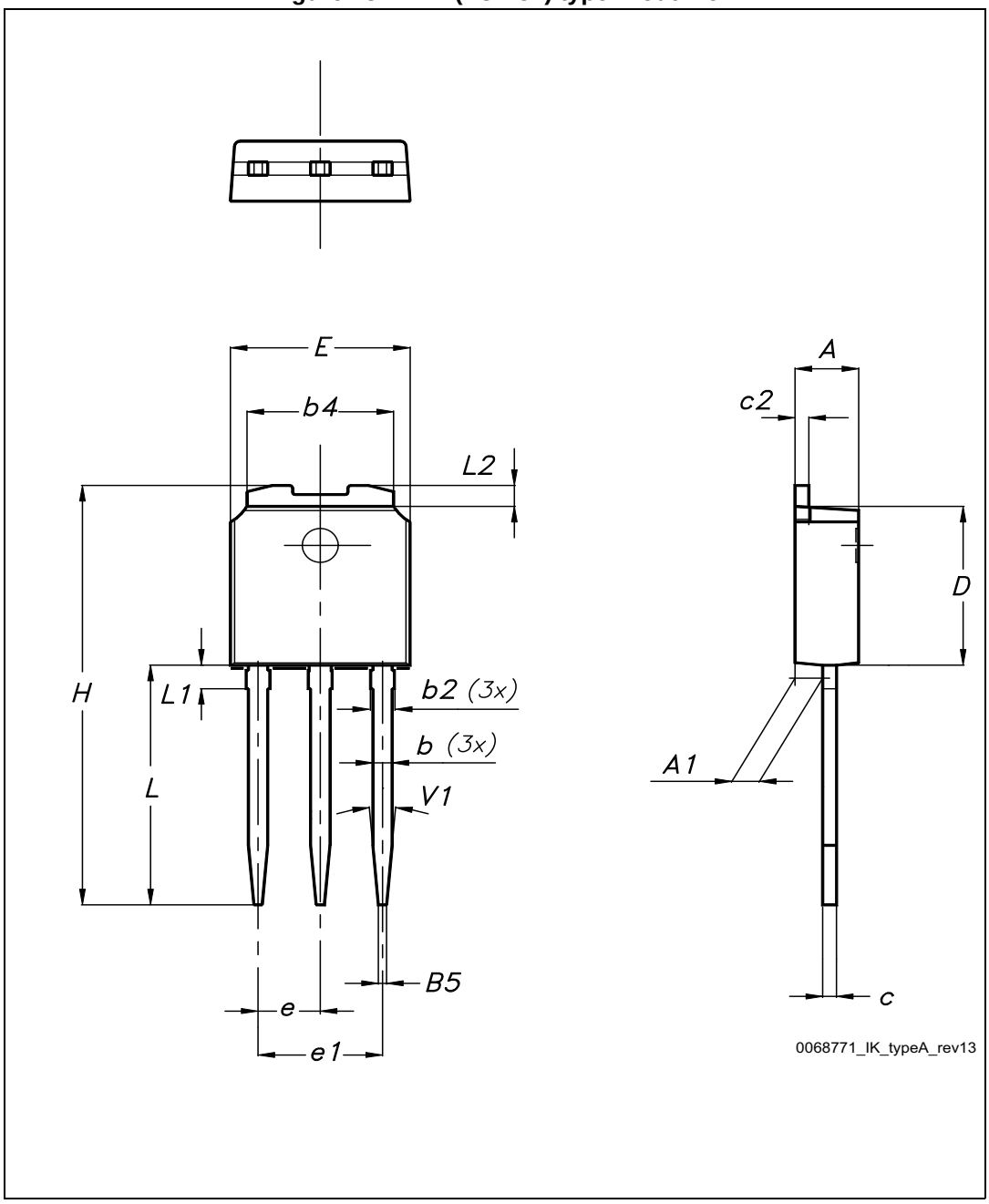

Table 14. IPAK (TO-251) type A mechanical data

Dim.	mm		
	Min.	Typ.	Max.
A	2.20		2.40
A1	0.90		1.10
b	0.64		0.90
b2			0.95
b4	5.20		5.40
B5		0.30	
c	0.45		0.60
c2	0.48		0.60
D	6.00		6.20
E	6.40		6.60
e		2.28	
e1	4.40		4.60
H		16.10	
L	9.00		9.40
L1	0.80		1.20
L2		0.80	1.00
V1		10°	

Figure 29. IPAK (TO-251) type C package outline

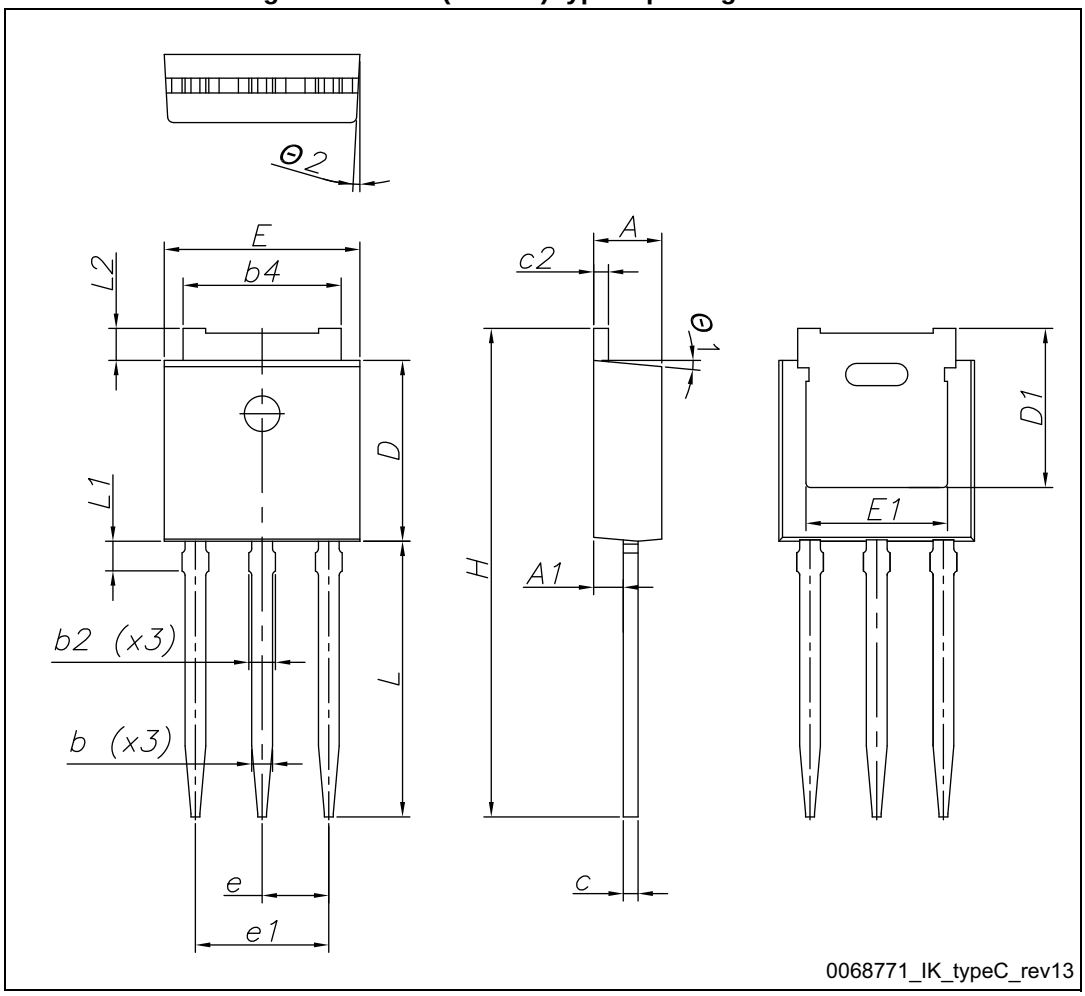

Table 15. IPAK (TO-251) type C package mechanical data

Dim.	mm		
	Min.	Typ.	Max.
A	2.20	2.30	2.35
A1	0.90	1.00	1.10
b	0.66		0.79
b2			0.90
b4	5.23	5.33	5.43
c	0.46		0.59
c2	0.46		0.59
D	6.00	6.10	6.20
D1	5.20	5.37	5.55
E	6.50	6.60	6.70
E1	4.60	4.78	4.95
e	2.20	2.25	2.30
e1	4.40	4.50	4.60
H	16.18	16.48	16.78
L	9.00	9.30	9.60
L1	0.90	1.00	1.20
L2	0.90	1.08	1.25
Θ1	3°	5°	7°
Θ2	1°	3°	5°

5 Packing information

Figure 30. Tape for DPAK (TO-252)

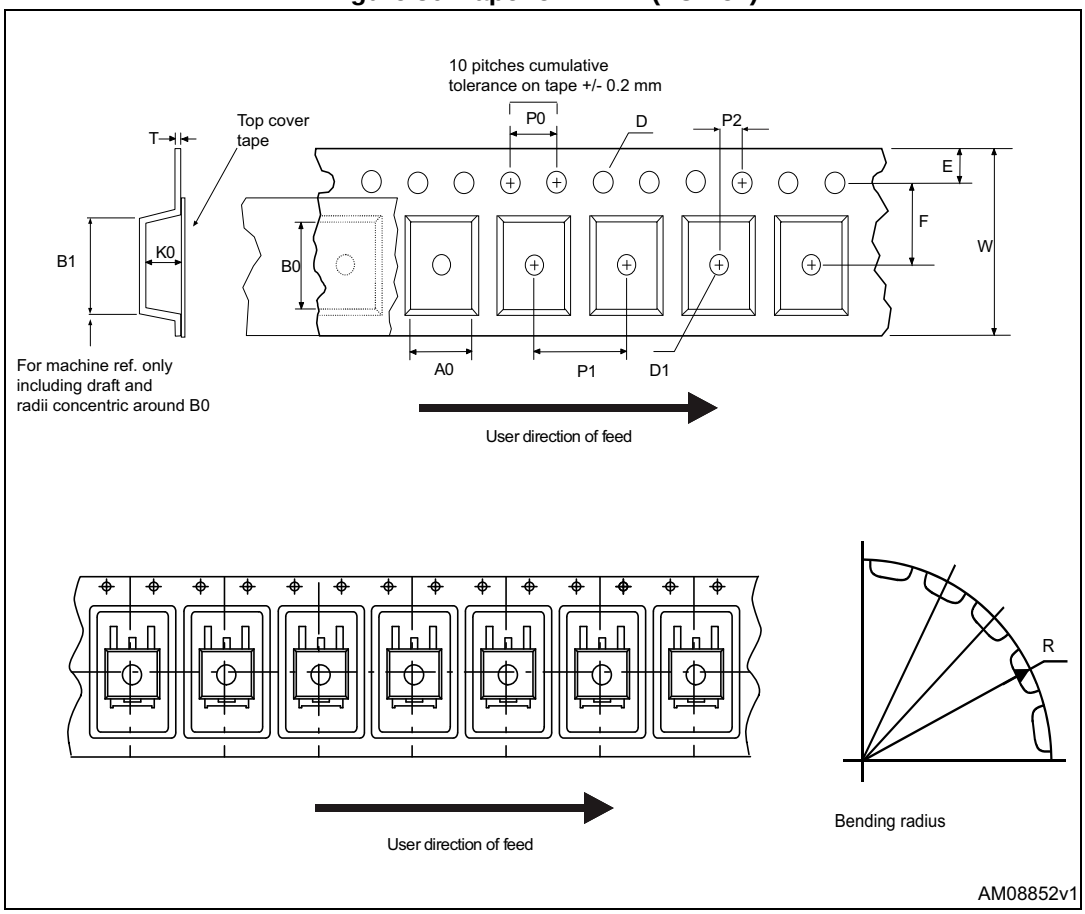

Figure 31. Reel for DPAK (TO-252)

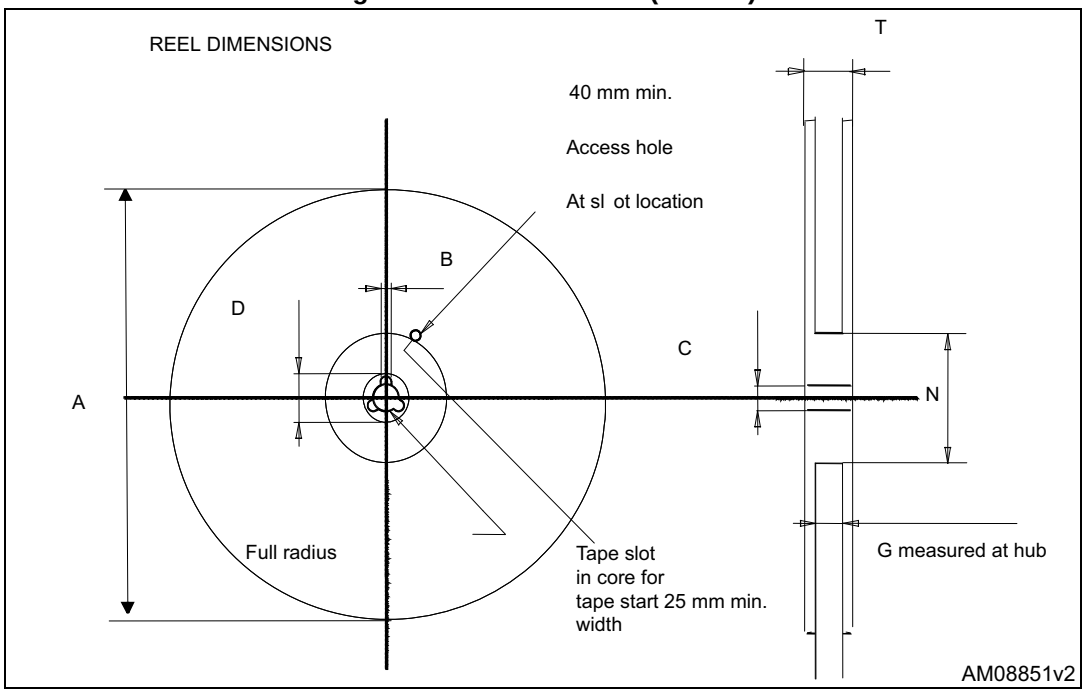

Table 16. DPAK (TO-252) tape and reel mechanical data

Tape			Reel		
Dim.	mm		Dim.	mm	
	Min.	Max.		Min.	Max.
A0	6.8	7	A		330
B0	10.4	10.6	B	1.5	
B1		12.1	C	12.8	13.2
D	1.5	1.6	D	20.2	
D1	1.5		G	16.4	18.4
E	1.65	1.85	N	50	
F	7.4	7.6	T		22.4
K0	2.55	2.75			
P0	3.9	4.1	Base quantity		2500
P1	7.9	8.1	Bulk quantity		2500
P2	1.9	2.1			
R	40				
T	0.25	0.35			
W	15.7	16.3			

6 Revision history

Table 17. Document revision history

Date	Revision	Changes
04-Dec-2015	1	First release. Part numbers previously included in the datasheet with DocID15764.

IMPORTANT NOTICE – PLEASE READ CAREFULLY

STMicroelectronics NV and its subsidiaries (“ST”) reserve the right to make changes, corrections, enhancements, modifications, and improvements to ST products and/or to this document at any time without notice. Purchasers should obtain the latest relevant information on ST products before placing orders. ST products are sold pursuant to ST’s terms and conditions of sale in place at the time of order acknowledgement.

Purchasers are solely responsible for the choice, selection, and use of ST products and ST assumes no liability for application assistance or the design of Purchasers’ products.

No license, express or implied, to any intellectual property right is granted by ST herein.

Resale of ST products with provisions different from the information set forth herein shall void any warranty granted by ST for such product.

ST and the ST logo are trademarks of ST. All other product or service names are the property of their respective owners.

Information in this document supersedes and replaces information previously supplied in any prior versions of this document.

© 2015 STMicroelectronics – All rights reserved

Mouser Electronics

Authorized Distributor

Click to View Pricing, Inventory, Delivery & Lifecycle Information:

STMicroelectronics:

STD10NM60N STF10NM60N STP10NM60N STU10NM60N